boracelik

ALL IN ONE DISPLAY SOLUTIONS

BRONZE 2141 CATALOG

boracelik

Architectural Retail Solutions

ALL IN ONE DISPLAY SOLUTIONS

•

BRONZE 2141 CATALOG

ABOUT US

Ourvalues are, Prioritization of safety, qualty, and environment in; our all actionos. To make our pesonnel internalize and practice the philosophy of constant improvement. To carry on relationships with our personnel and bussiness partners based on honesty and standing trust. To prioritise cost reduction in our all processes. To complete a task in one go, on desired time and without any inaccuracy. To give weight to teamwork for the effective participation by prviding trainings enchancing their knowledge and skill. to follow the develompments about our sector and become the leader of innovations andimplementtations. To be a solution partner by getting involves in our customer's designstudies. to be respectfull to humanity an society.

STRONG CONNECTION WITH HIGH **TECHNOLOGY**

Abotut Us Founded in **1976**, Bora Celik is a bespoke designer, manufacturer and supplier of showroom display panels, situated in Eskisehir, Turkey. Our main product lines consist of, but are not limited to, Ceramic display cabinets, Display panels, Door displays, Tile display stands, along with Tile, Stone, Marble and Mosaic displays. We also design and manufacture commercial areas and showrooms that cater to the ceramics and bathroom industries. Our strength comes from our custom design and unique production capabilities, ensuring that both our production and supply organisations are flexible enough to manufacture and deliver any volumes.In short, we can and will deliver any amount of product within the timescale required, without any order restrictions, with branding and packing being decided by our clients. Our highly skilled design team will ensure that all aspects of quality, dimensions and general design build meet your expectations, whilst providing a tailored and cost effective solution to your needs, when productivity is essential. Bora Celik is here for you, as a trustworthy supplier when you require comprehension, communication, research and service.

ABOUT US

Who Are We Bora Celik's key success comes forom its dynamic, innovative, entrepreneur structure and harmony energy in its own up to now and so it has been. Our company which has 11.000 squer meter area and has also 650 m2 in Istanbul. Bora Celik architechtural retai desing concentrates on "exhibition design as converted developed notions for retail strateggy into different space types segmetation and architechtural strcture by creatng conceept visla designs.

What We Are Doing Design (corporate identity - store - exhibition etc.)
Performance (store concept turn-key/domestic- foreign)
Prodiction (mass production of showroom equpment/custom design production)
Frontal design and aplication (sidding/advertising board applicatinon etc.) Exhibition design+application (domestic foregin)

How we are doing Concept store plan Sketch plan of retail area 3D Concept store design sketches of 3D brand experience- general environment furniture & feature areas transaction/domonstration and promotion zones. Shop front showing store signage & winow treatment, Promo areas ,3D Concept store design sketch of future zones Feature entrence finishes proğosals for flooring ceiling lighting wall finishes , Element detailing to crate a comprehensive design manula, based on an "ideal" layout. Working drawings (design intent) of all elements & feature areas
Model Store plans and elevations based on a standart "ideal" location

Showroom & Fair Design Bora Celik provides to its clients a comprehensive service focusing on the showroom and fair design with the highest technological applicatio"n and creative, highly skilled team of designers & technicians.

Research - Development Research and development team plays a critical role in the innovation process of displays. Bora Celik makes essential investment in technology and future capabilities which is transformed into new products, processes, and services.

Display Systems Harmonized With Metal and Wood

Bora Celik manufactures display systems harmonized with metal and wood using a wide variety of materials. From prototype to completion, we are proud of our proven track record. We manufacture products to the highest quality and dispatch on time. Bora Celik' s key success comes from its dynamic, innovative, entrepreneur structure and energy in its own up to now and so it has been.

Printing Bora Celik offers to its clients large format digital printing with high tech machine HP Latex 3010, offset printing with high quality.

Packing and Logistics As Bora Celik, we are paying special attention to the packing in order to protect the goods and enable an easy loading & unloading without any damages or difficulties. Our logistics team handles carefully all aspects of the process, assisting you also in every step of the custom procedures and providing all relevant documentation convenient to each countries formalities and regulations.

After Sell Service Bora Celik builds a long-term relationship with its customers, earn their loyalty and keep their business with letting them online services and with providing repairs, refunds and warranties.

Terms of Sale Bora Celik reserves the right to make changes to the material or design of the product if necessary for easy usage and stability.
In this catalogue, some of the products shows accessories and tiles, these are not included in the sale.

Terms of Waranty Bora Celik warrants that products shall be delivered free from defects in material and workmanship and in accordance with any mutually agreed specifications. The warranty for products shall expire 1year from the shipment date of the products to emphasize the high quality standard. After the expiration of this 1 year period seller shall no longer accept warranty claims and all obligations for warranty shall terminate.

INDEX

INDEX

INDEX

BP

PANELS
10
30

Hand Panels
Panels
Digital Print

PANELS

BC

CRADLES
10
30

Ceramic Cradles
Hand Panel Cradles
Parquet Cradles
Mosaic, Chart Cradles

CRADLES

BR

STANDS
10
30

Stand A, B, C, D
Stand BX Series
Stand BL Series

STANDS

BT

TOTEMS
10
30

Fixed Totems
Moving Totems

TOTEMS

BD

DRAWERS
10
30

Drawers

DRAWERS

BS

DISPLAYS & SHOWROOMS
10
30

Armature, Sanitary Stands
Shower Plate Stands
Doors Stands
Carpet Stands

DISPLAYS

PANELS

BP

PANELS
9
15

Hand Panels
Panels
Digital Print

PANELS

PANELS

Handle
Corner
Print, Press
Edge
LOGO
Height
Width
Thickness
Material

HAND PANEL'S HANDLE DETAILS

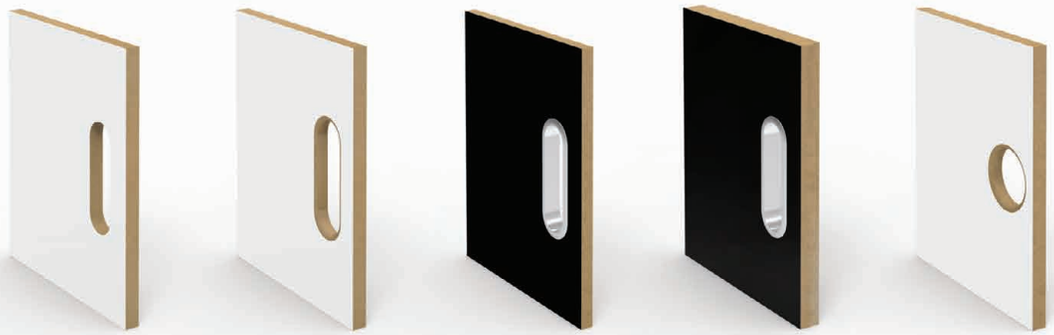

H 01
Flat Ellipse

H 02
Soft Ellipse

H 03
Plastic Ellipse (8mm)

H 04
Plastic Ellipse (12mm)

H 05
Soft Circle

HAND PANEL'S CORNER DETAILS

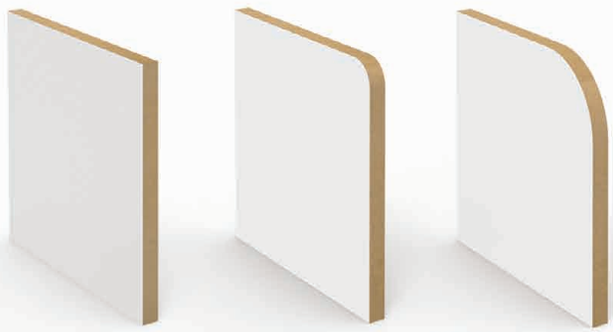

C 01
Flat Corner

C 02
Radius Corner 20mm

C 03
Radius Corner 40mm

HAND PANEL'S EDGE DETAILS

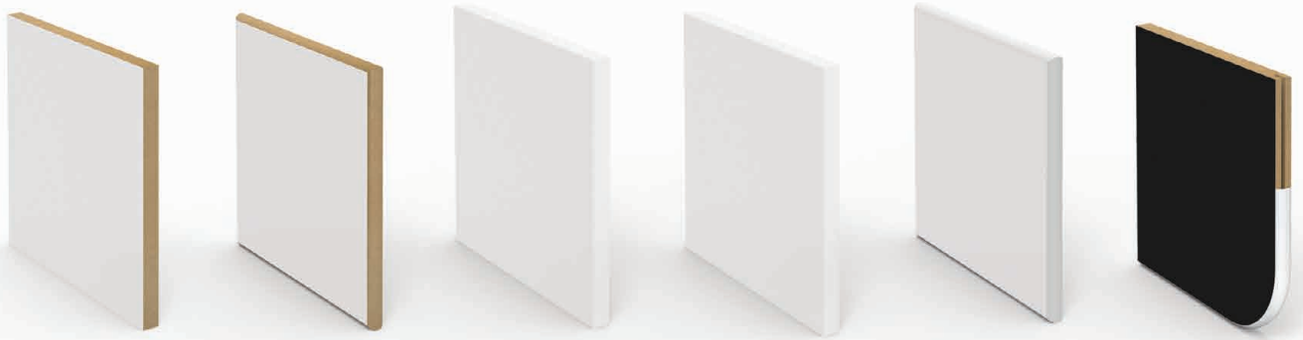

E 01
Flat Edge

E 02
Radius Edge

E 03
Pvc Banding Edge

E 04
Flat Painting Edge

E 05
Radius Painting

E 06
Pls Gasket Chrome

HAND PANEL'S PRINT DETAILS

P 01
Stript Print

P 02
Offset Print

P 03
Digital Print

P 04
Serigraphy Print

P 05
Foil Cut Press

P 06
UV Digital Print

P 07
Digital Print + Lamination

BP 000 D

HAND PANEL'S MDF RAW

Code	Panel Size	Thic.	Edge	Corner	Print	Handle	Weigth
	Cm	mm					Kg
BP 006 D 00		6					
BP 008 D 00		8					
BP 010 D 00		10					
BP 012 D 00		12					

6 mm
8 mm
10mm
12mm

BP 000 E

HAND PANEL'S MDFLAM ONE SIDE LAM

Code	Panel Size	Thic.	Edge	Corner	Print	Handle	Weigth
	Cm	mm					Kg
BP 006 E 00		6					
BP 008 E 00		8					
BP 010 E 00		10					
BP 012 E 00		12					

6 mm
8 mm
10mm
12mm

BP 000 F

HAND PANEL'S MDFLAM DOUBLE SIDE LAM

Code	Panel Size	Thic.	Edge	Corner	Print	Handle	Weigth
	Cm	mm					Kg
BP 005 F 00		5					
BP 006 F 00		6					
BP 008 F 00		8					
BP 010 F 00		10					
BP 012 F 00		12					

6 mm
8 mm
10mm
12mm

BP 000 G

HAND PANEL'S MDF PAINT DOUBLE SIDE

Code	Panel Size	Thic.	Edge	Corner	Print	Handle	Weigth
	Cm	mm					Kg
BP 006 G 00		6					
BP 008 G 00		8					
BP 010 G 00		10					
BP 012 G 00		12					

6 mm
8 mm
10mm
12mm

BP 000 H

HAND PANEL'S MDF LACQUER DOUBLE SIDE

Code	Panel Size	Thic.	Edge	Corner	Print	Handle	Weigth
	Cm	mm					Kg
BP 006 H 00		6					
BP 008 H 00		8					
BP 010 H 00		10					
BP 012 H 00		12					

6 mm
8 mm
10mm
12mm

BP 000 I

HAND PANEL'S MDF LACQUER DOUBLE SIDE

Code	Panel Size	Thic.	Edge	Corner	Print	Handle	Weigth
	Cm	mm					Kg
BP 005 I 00	5*5	5					

BP 000 L

HAND PANEL'S MELAMIN CHIPBOARD

Code	Panel Size	Thic.	Edge	Corner	Print	Handle	Weigth
	Cm	mm					Kg
		8					
BP 012 L 00		12					
BP 018 L 00		18					

8 mm
12mm
18mm

BP 000 A

PANELS CHIPBOARD

Code	Panel Size	Thic.	Edge	Corner	Print	Handle	Weigth
	Cm	mm					Kg
BP 018 A 01	100*193	18					
BP 018 A 02	100*200	18					
BP 018 A 03	100*227	18					
BP 018 A 04	100*240	18					
BP 018 A 05	100*260	18					
BP 018 A 06	100*300	18					
BP 018 A 07	120*200	18					
BP 018 A 08	120*227	18					
BP 018 A 09	120*240	18					
BP 018 A 10	120*280	18					

18mm

BP 000 B

PANELS MELAMIN CHIPBOARD

Code	Panel Size	Thic.	Edge	Corner	Print	Handle	Weigth
	Cm	mm					Kg
BP 018 B 01	100*193	18					
BP 018 B 02	100*200	18					
BP 018 B 03	100*227	18					
BP 018 B 04	100*240	18					
BP 018 B 05	100*260	18					
BP 018 B 06	100*300	18					
BP 018 B 07	120*200	18					
BP 018 B 08	120*227	18					
BP 018 B 09	120*240	18					
BP 018 B 10	120*280	18					

18mm

BP 000 C

PANEL'S MELAMIN CHIPBOARD + DIGITAL PRINT

Code	Panel Size	Thic.	Edge	Corner	Print	Handle	Weigth
	Cm	mm					Kg
BP 018 C 01	100*193	18					
BP 018 C 02	100*200	18					
BP 018 C 03	100*227	18					
BP 018 C 04	100*240	18					
BP 018 C 05	100*260	18					
BP 018 C 06	100*300	18					
BP 018 C 07	120*200	18					
BP 018 C 08	120*227	18					
BP 018 C 09	120*240	18					
BP 018 C 10	120*280	18					

18mm

BP 000 R

PANELS MELAMIN CHIPBOARD + DIGITAL PRINT + LAMINATION

Code	Panel Size	Thic.	Edge	Corner	Print	Handle	Weigth
	Cm	mm					Kg
BP 018 R 01	100*193	18					
BP 018 R 02	100*200	18					
BP 018 R 03	100*227	18					
BP 018 R 04	100*240	18					
BP 018 R 05	100*260	18					
BP 018 R 06	100*300	18					
BP 018 R 07	120*200	18					
BP 018 R 08	120*227	18					
BP 018 R 09	120*240	18					
BP 018 R 10	120*280	18					

18mm

BP 000 K

PANELS FOREX+DIGITAL PRINT

Code	Panel Size	Thic.	Edge	Corner	Print	Handle	Weigth
	Cm	mm					Kg
BP 003 K 00		3					
BP 005 K 00		3					
BP 010 K 00		3					

0,50mm

BP 000 J

DIGITAL PRINT FOLIO

Code	Panel Size	Thic.	Edge	Corner	Print	Handle	Weigth
	Cm	mm					Kg
BP 018 J 01	100*193	0,5					
BP 018 J 02	100*200	0,5					
BP 018 J 03	100*227	0,5					
BP 018 J 04	100*240	0,5					
BP 018 J 05	100*260	0,5					
BP 018 J 06	100*300	0,5					
BP 018 J 07	120*200	0,5					
BP 018 J 08	120*227	0,5					
BP 018 J 09	120*240	0,5					
BP 018 J 10	120*280	0,5					

0,50mm

BP 000 P

DIGITAL PRINT FOLIO+DIGITAL PRINT+LAMINATION

Code	Panel Size	Thic.	Edge	Corner	Print	Handle	Weigth
	Cm	mm					Kg
BP 018 P 01	100*193	0,5					
BP 018 P 02	100*200	0,5					
BP 018 P 03	100*227	0,5					
BP 018 P 04	100*240	0,5					
BP 018 P 05	100*260	0,5					
BP 018 P 06	100*300	0,5					
BP 018 P 07	120*200	0,5					
BP 018 P 08	120*227	0,5					
BP 018 P 09	120*240	0,5					
BP 018 P 10	120*280	0,5					

0,50mm

BP 000 S

PANELS OSB

Code	Panel Size	Thic.	Edge	Corner	Print	Handle	Weigth
	Cm	mm					Kg
BP 009 S 00		9					
BP 011 S 00		11					

9mm
11mm

BP 902 V

CORNER COVER TRANSPARENT PLACTIC

Code	Panel Size	Thic.	Edge	Corner	Print	Handle	Weigth
	Cm	mm					Kg
BP 902 V 01	5*5						

BP 904 V

HANDLE TRANSPARENT PLASTIC

Code	Panel Size	Thic.	Edge	Corner	Print	Handle	Weigth
	Cm	mm					Kg
BP 904 V 01	20*22						

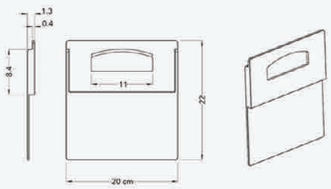

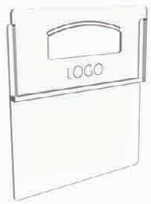

BP 908 V

LABEL STOCK FOR PANELS

Code	Panel Size	Thic.	Edge	Corner	Print	Handle	Weigth
	Cm	mm					Kg
BP 908 V 01		9					

BP 910 V

SHEET PANELS

Code	Panel Size	Thic.	Edge	Corner	Print	Handle	Weigth
	Cm	mm					Kg
BP 910 V 01							
BP 910 V 02							

CRADLES

BC

CRADLES

10

30

Ceramic Cradles
Hand Panel Cradles
Parquet Cradles
Mosaic, Chart Cradles

CRADLES

CRADLES

BC010A

CREDLES

Code	Stand Size	Panels	Panel Size	Max	Packing	Total
	Cm	Qty	Cm	Kg	Cm	Kg
BC010A01	134*1.5*134	1	120*120	-	-	-
BC010A02	114*1.5*114	1	100*100	-	-	-
BC010A03	104*1.5*104	1	90*90	-	-	-
BC010A04	94*1.5*94	1	80*80	-	-	-
BC010A06	74*1.5*134	1	60*120	-	-	-
BC010A07	174*1.5*174	1	160*160	-	-	-

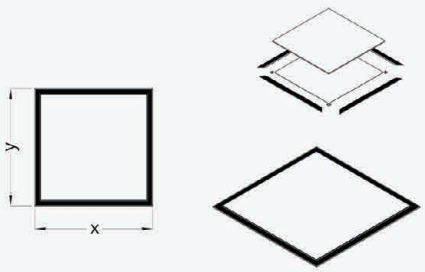

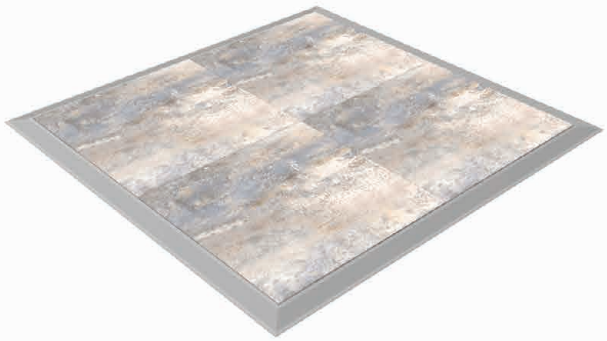

BC034A

CREDLES

Code	Stand Size	Panels	Panel Size	Max	Packing	Total
	Cm	Qty	Cm	Kg	Cm	Kg
BC034A01	100*26*90	7	100*100	-	-	-

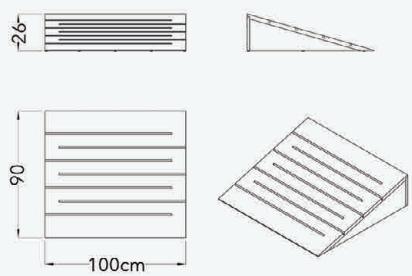

BC035A

CREDLES

Code	Stand Size	Panels	Panel Size	Max	Packing	Total
	Cm	Qty	Cm	Kg	Cm	Kg
BC035A01	122*98*10	10	75*75	-	-	-
BC035A02	88*162*80	10		-	-	-
BC035A03	122*98*10	10	75*75	-	-	-

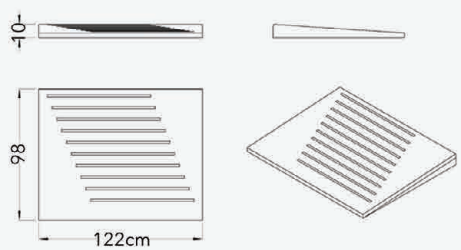

BC036A

CREDLES

Code	Stand Size	Panels	Panel Size	Max	Packing	Total
	Cm	Qty	Cm	Kg	Cm	Kg
BC036A01	41*5*55	11	-	-	-	-

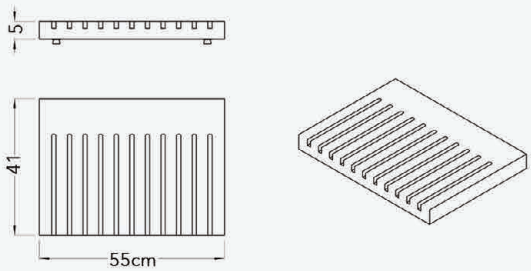

BC038A

CREDLES

Code	Stand Size	Panels	Panel Size	Max	Packing	Total
	Cm	Qty	Cm	Kg	Cm	Kg
BC038A01	42*60*62	12	60*60	-	-	-
BC038A02	42*60*62	12	45*90	-	-	-
BC038A03	42*60*62	12	50*100	-	-	-
BC038A04	42*60*62	12	60*60	-	-	-

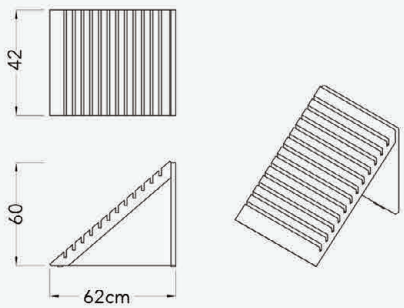

BC039A

CREDLES

Code	Stand Size	Panels	Panel Size	Max	Packing	Total
	Cm	Qty	Cm	Kg	Cm	Kg
BC039A01	52*60*52	12	65*40	-	-	-
BC039A02	52*60*52	12	45*90	-	-	

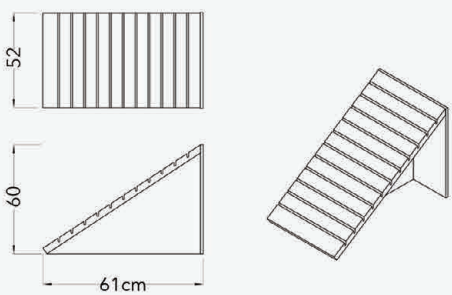

BC040A

CREDLES

Code	Stand Size	Panels	Panel Size	Max	Packing	Total
	Cm	Qty	Cm	Kg	Cm	Kg
BC040A01	90*6*100	6	120*120	-	-	-
BC040A02	90*6*100	8	120*120	-	-	-
BC040A03	47.5*6*80	9	47,5*80	-	-	-
BC040A04	50*5.4*100	6	69*104	-	-	-
BC040A05	46*5,5*25	6	-	-	-	
BC040A06	50*6*100	8	-	-	-	

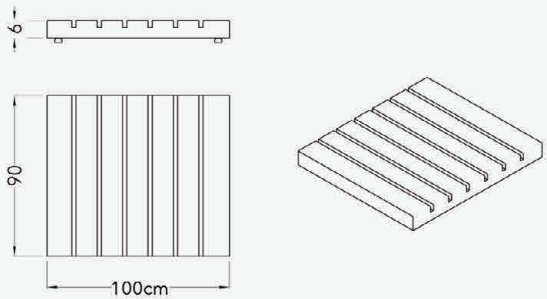

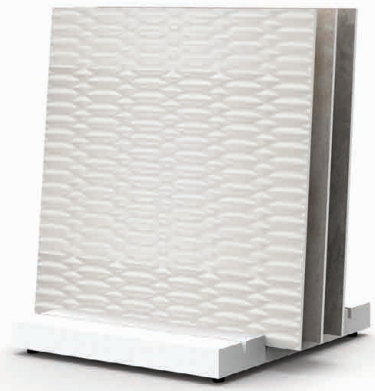

BC041A

CREDLES

Code	Stand Size	Panels	Panel Size	Max	Packing	Total
	Cm	Qty	Cm	Kg	Cm	Kg
BC041A01	24*8*16.5	-	50*50	-	-	-

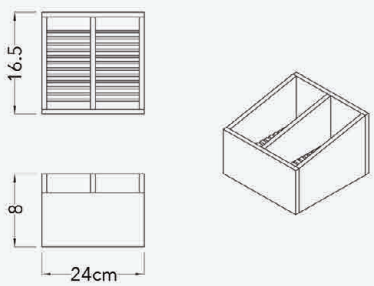

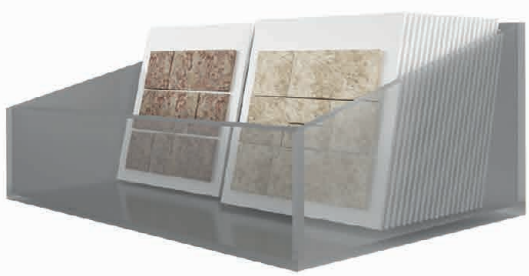

BC042A

CREDLES

Code	Stand Size	Panels	Panel Size	Max	Packing	Total
	Cm	Qty	Cm	Kg	Cm	Kg
BC042A01	41*26*105	10	-	-	-	-

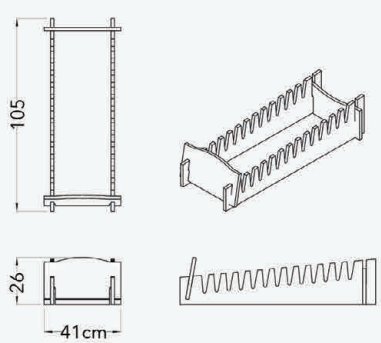

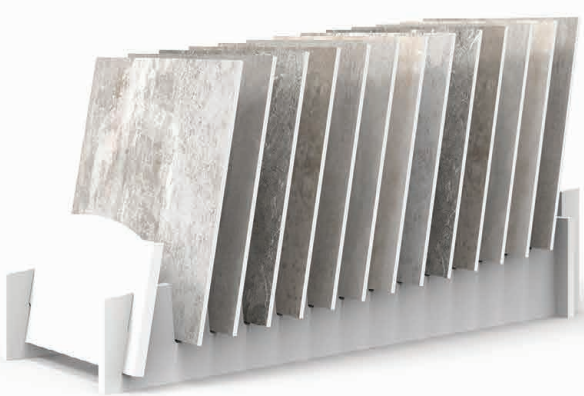

BC047A

CREDLES

Code	Stand Size	Panels	Panel Size	Max	Packing	Total
	Cm	Qty	Cm	Kg	Cm	Kg
BC047A01	44*48*50	10	-	-	-	-

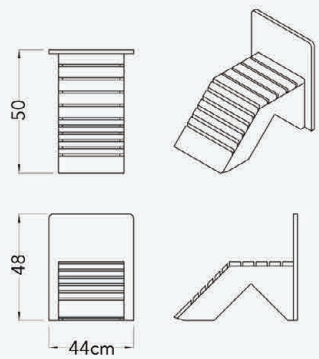

BC051A

CREDLES

Code	Stand Size	Panels	Panel Size	Max	Packing	Total
	Cm	Qty	Cm	Kg	Cm	Kg
BC051A01	50*25*57	9	-	-	-	-

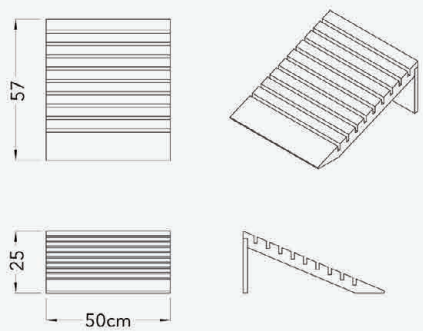

BC052A

CREDLES

Code	Stand Size	Panels	Panel Size	Max	Packing	Total
	Cm	Qty	Cm	Kg	Cm	Kg
BC052A01	55*50*73	6	-	-	-	-
BC052A02	55*50*71	6	-	-	-	-

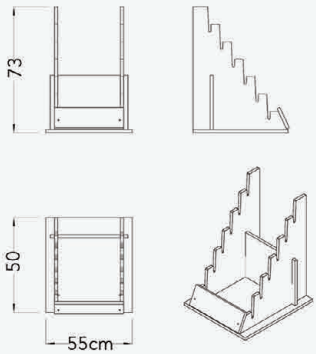

BC058A

CREDLES

Code	Stand Size	Panels	Panel Size	Max	Packing	Total
	Cm	Qty	Cm	Kg	Cm	Kg
BC058A01	55*153*60	9	68*98	-	-	-

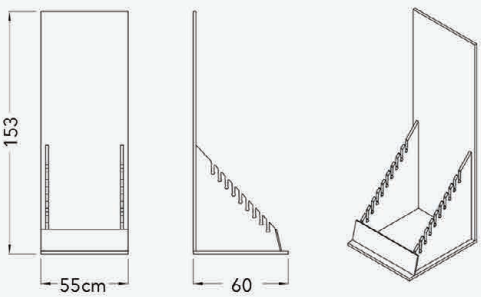

BC059A

CREDLES

Code	Stand Size	Panels	Panel Size	Max	Packing	Total
	Cm	Qty	Cm	Kg	Cm	Kg
BC059A01	60*200*80	10	-	-	-	-

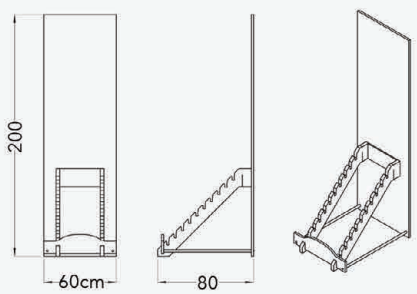

BC061A

CREDLES

Code	Stand Size	Panels	Panel Size	Max	Packing	Total
	Cm	Qty	Cm	Kg	Cm	Kg
BC061A01	110*28*80	6	139*41	-	-	-

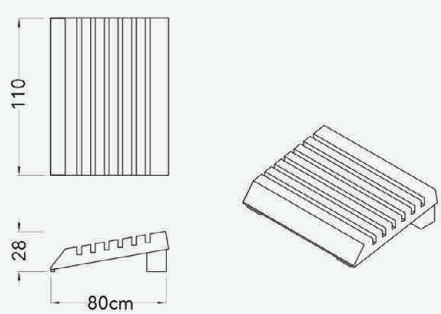

BC063A

CREDLES

Code	Stand Size	Panels	Panel Size	Max	Packing	Total
	Cm	Qty	Cm	Kg	Cm	Kg
BC063A01	45*36*72	10	-	-	-	-

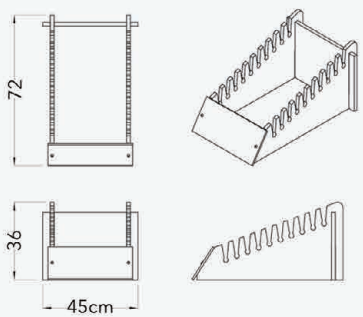

BC065B

CREDLES

Code	Stand Size	Panels	Panel Size	Max	Packing	Total
	Cm	Qty	Cm	Kg	Cm	Kg
BC065B01	36*51*52	6	-	-	-	-

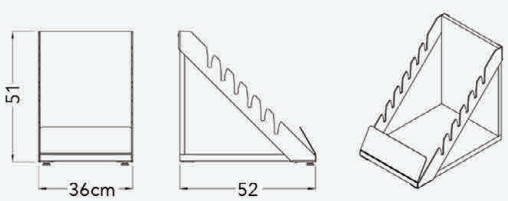

BC067A

CREDLES

Code	Stand Size	Panels	Panel Size	Max	Packing	Total
	Cm	Qty	Cm	Kg	Cm	Kg
BC067A01	25*23*62	7	-	-	-	-

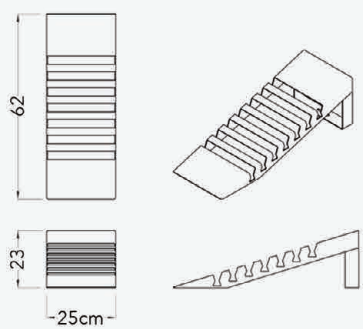

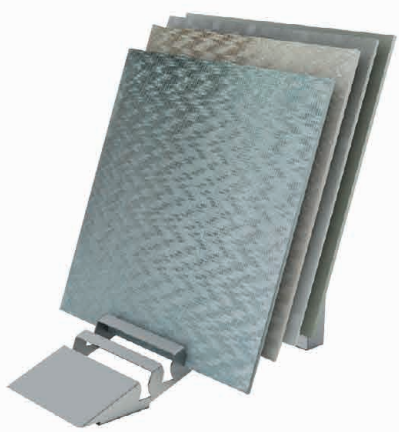

BC069A

CREDLES

Code	Stand Size	Panels	Panel Size	Max	Packing	Total
	Cm	Qty	Cm	Kg	Cm	Kg
BC069A01	25*24*65	12	-	-	-	-
BC069A02	20*23*65	12	-	-	-	-
BC069A03	45*24*65	12	-	-	-	-

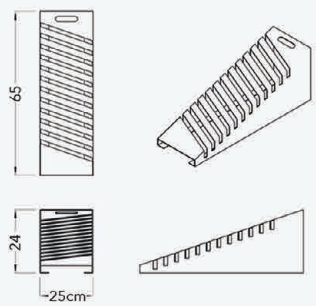

BC070A

CREDLES

Code	Stand Size	Panels	Panel Size	Max	Packing	Total
	Cm	Qty	Cm	Kg	Cm	Kg
BC070A01	25*21*67	10	-	-	-	-
BC070A02		10	30	-	-	-
BC070A03	45*22*67	10	45	-	-	-
BC070A04		10	52	-	-	-
BC070A05	25*22*67	10	25	-	-	-

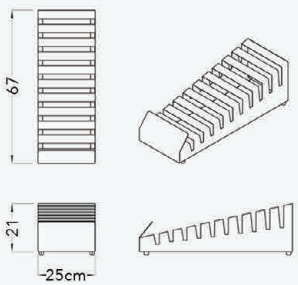

BC071A

CREDLES

Code	Stand Size	Panels	Panel Size	Max	Packing	Total
	Cm	Qty	Cm	Kg	Cm	Kg
BC071A01	38*32*87	12	-	-	-	-

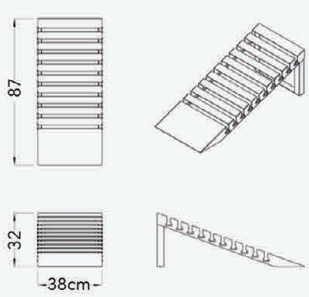

BC073A

CREDLES

Code	Stand Size	Panels	Panel Size	Max	Packing	Total
	Cm	Qty	Cm	Kg	Cm	Kg
BC073A01	91*51*52	6	60*120	-	-	-

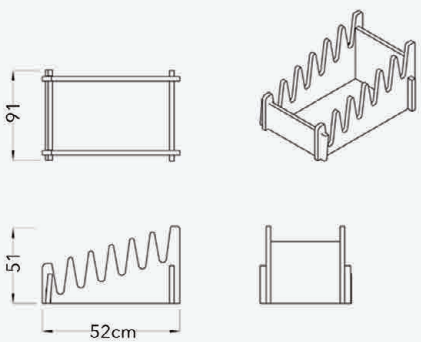

BC075A

CREDLES

Code	Stand Size	Panels	Panel Size	Max	Packing	Total
	Cm	Qty	Cm	Kg	Cm	Kg
BC075A01	80*8.5*60	14	-	-	-	-
BC075A02	80*14*50	14	-	-	-	-

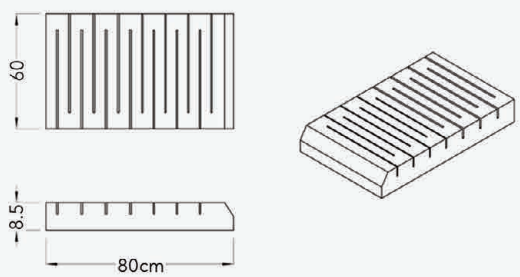

BC076A

CREDLES

Code	Stand Size	Panels	Panel Size	Max	Packing	Total
	Cm	Qty	Cm	Kg	Cm	Kg
BC076A01	30*5.5*82	6	-	-	-	-

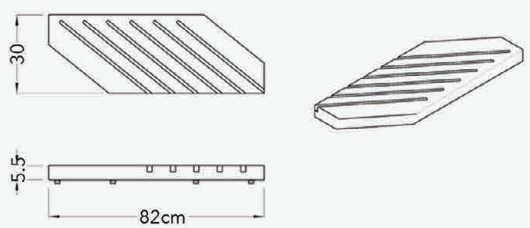

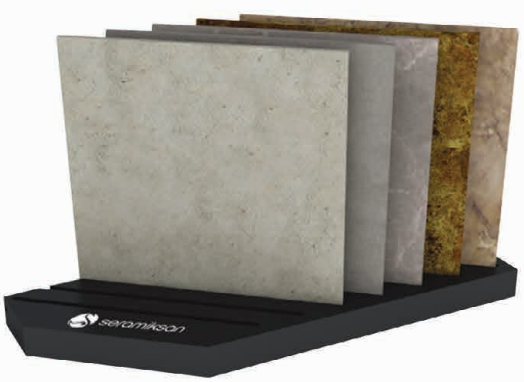

BC077A

CREDLES

Code	Stand Size	Panels	Panel Size	Max	Packing	Total
	Cm	Qty	Cm	Kg	Cm	Kg
BC077A01	30*3.5*60	7	-	-	-	-

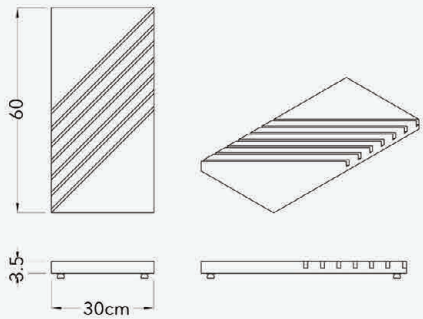

BC078A

CREDLES

Code	Stand Size	Panels	Panel Size	Max	Packing	Total
	Cm	Qty	Cm	Kg	Cm	Kg
BC078A01	25*6*68	10	-	-	-	-

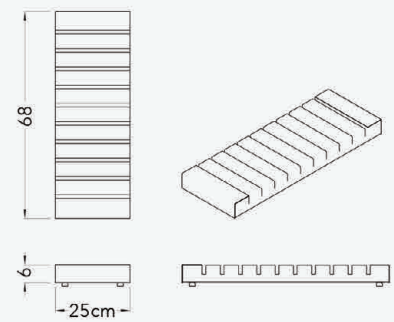

BC079A

CREDLES

Code	Stand Size	Panels	Panel Size	Max	Packing	Total
	Cm	Qty	Cm	Kg	Cm	Kg
BC079A01	51*10*52	6	50*120	-	-	-

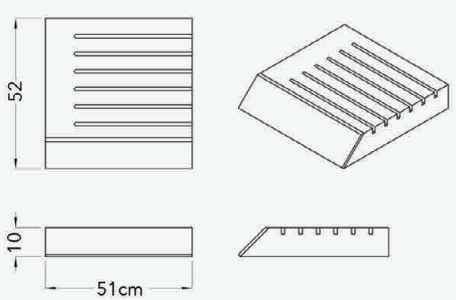

BC080A

CREDLES

Code	Stand Size	Panels	Panel Size	Max	Packing	Total
	Cm	Qty	Cm	Kg	Cm	Kg
BC080A01	68*170*48	6	-	-	-	-

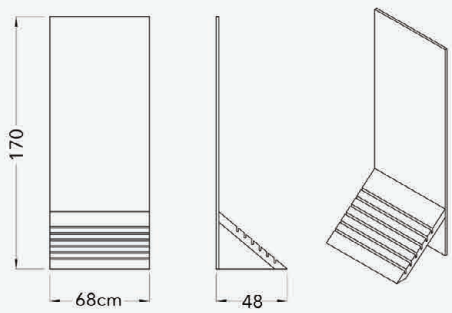

BC083A

CREDLES

Code	Stand Size	Panels	Panel Size	Max	Packing	Total
	Cm	Qty	Cm	Kg	Cm	Kg
BC083A01	72*108*39	12	35*160	-	-	-

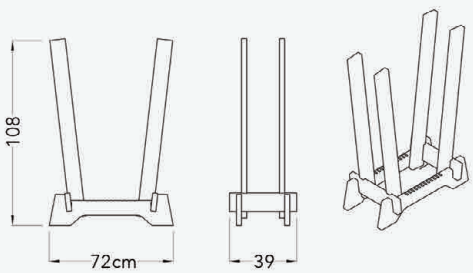

BC087A

CREDLES

Code	Stand Size	Panels	Panel Size	Max	Packing	Total
	Cm	Qty	Cm	Kg	Cm	Kg
BC087A01	40*35*65	6	-	-	-	-

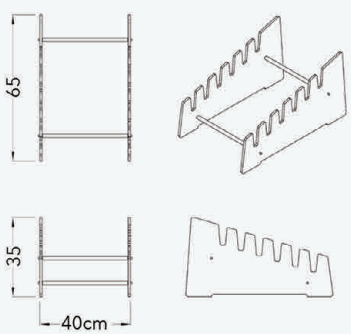

BC088A

CREDLES

Code	Stand Size	Panels	Panel Size	Max	Packing	Total
	Cm	Qty	Cm	Kg	Cm	Kg
BC088A01	68*210*68	6	-	-	-	-

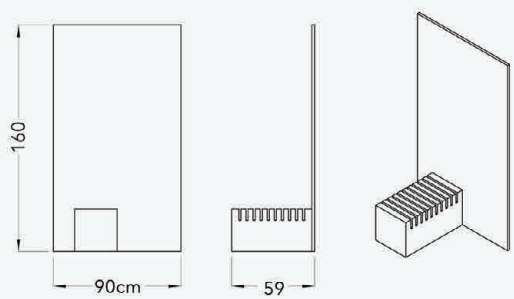

BC091A

CREDLES

Code	Stand Size	Panels	Panel Size	Max	Packing	Total
	Cm	Qty	Cm	Kg	Cm	Kg
BC091A01		11+3	30*120	-	-	-
BC091A02		11+3	30-16*120	-	-	-
BC091A03		11+3	40*120	-	-	-

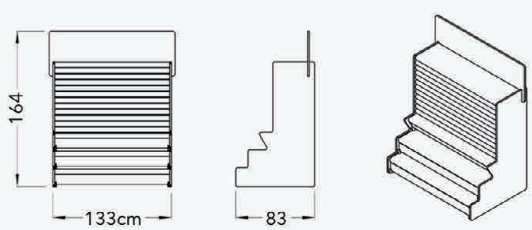

BC093A

CREDLES

Code	Stand Size	Panels	Panel Size	Max	Packing	Total
	Cm	Qty	Cm	Kg	Cm	Kg
BC093A01	62*31*65	6	62*102	-	-	-

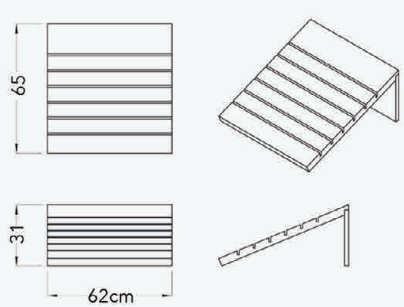

BC104A

CREDLES

Code	Stand Size	Panels	Panel Size	Max	Packing	Total
	Cm	Qty	Cm	Kg	Cm	Kg
BC104A01	45*60*76	6	-	-	-	-

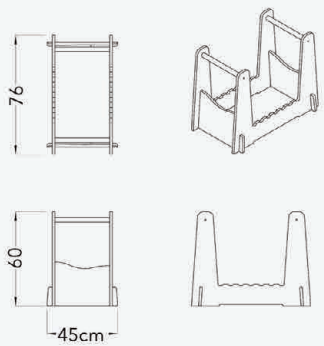

BC105A

CREDLES

Code	Stand Size	Panels	Panel Size	Max	Packing	Total
	Cm	Qty	Cm	Kg	Cm	Kg
BC105A01	123*167*52	12	60*60	-	-	-
BC105A02	123*167*52	12	40*120	-	-	-

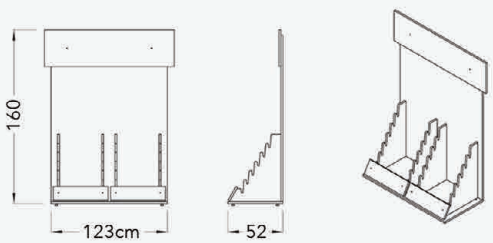

BC106A

CREDLES

Code	Stand Size	Panels	Panel Size	Max	Packing	Total
	Cm	Qty	Cm	Kg	Cm	Kg
BC106A01	54*50*80	10	-	-	-	-

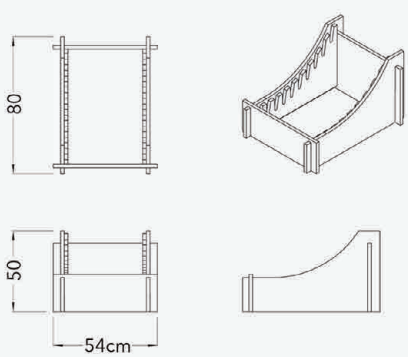

BC115A

CREDLES

Code	Stand Size	Panels	Panel Size	Max	Packing	Total
	Cm	Qty	Cm	Kg	Cm	Kg
BC115A01	45*154*87	10+10	-	-	-	-

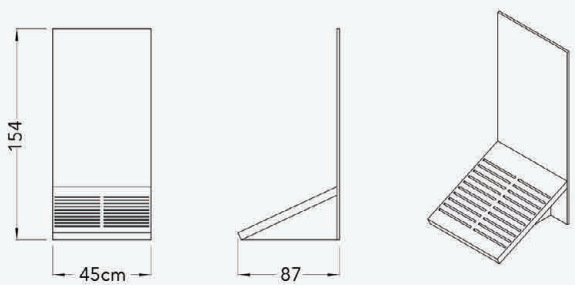

BC116A

CREDLES

Code	Stand Size	Panels	Panel Size	Max	Packing	Total
	Cm	Qty	Cm	Kg	Cm	Kg
BC116A01	80*150*70	10+10	-	-	-	-
BC116A02	80*150*70	10+10	60-30*60	-	-	-

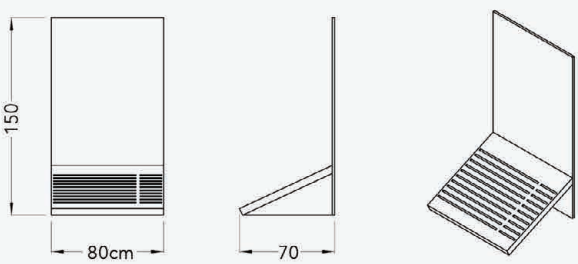

BC117B

CREDLES

Code	Stand Size	Panels	Panel Size	Max	Packing	Total
	Cm	Qty	Cm	Kg	Cm	Kg
BC117B01	48*160*57	6+6	15*90	-	-	-
BC117B02	63*100*57	6+6	45*90	-	-	-
BC117B03	105*160*55	6+6	45*90	-	-	-
BC117B04		6+6	20*120	-	-	-

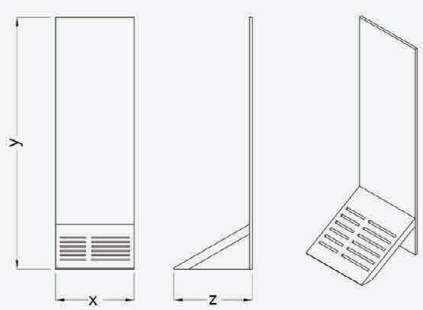

BC117S

CREDLES

Code	Stand Size	Panels	Panel Size	Max	Packing	Total
	Cm	Qty	Cm	Kg	Cm	Kg
BC117S01	47*164*81	10	32*127	-	-	-

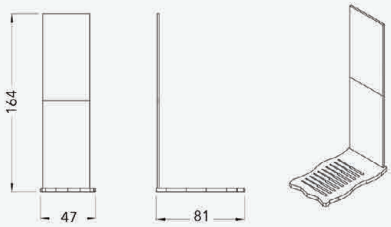

BC118A

CREDLES

Code	Stand Size	Panels	Panel Size	Max	Packing	Total
	Cm	Qty	Cm	Kg	Cm	Kg
BC118A01	61*137*54.5	10	15*90	-	-	-

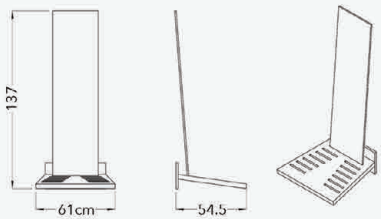

BC121A

CREDLES

Code	Stand Size	Panels	Panel Size	Max	Packing	Total
	Cm	Qty	Cm	Kg	Cm	Kg
BC121A01	33*100*87	14	30*60	-	-	-
BC121A02	30*108*98	20	30*60	-	-	-

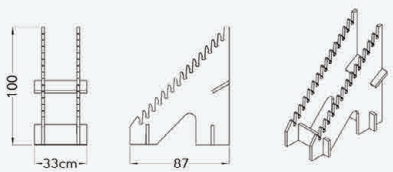

BC122A

CREDLES

Code	Stand Size	Panels	Panel Size	Max	Packing	Total
	Cm	Qty	Cm	Kg	Cm	Kg
BC122A01	82*47*21	40	15*15	-	-	-

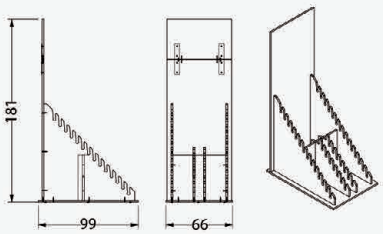

NEW

BC130A

CREDLES

Code	Stand Size	Panels	Panel Size	Max	Packing	Total
	Cm	Qty	Cm	Kg	Cm	Kg
BC130A01	120*50.5*57	8	60*120	-	-	-
BC130A02	120*50.5*57	8	90*145	-	-	-
BC130A03	120*50.5*57	8	70*115	-	-	-
BC130A04	120*50.5*57	8	30*60	-	-	-

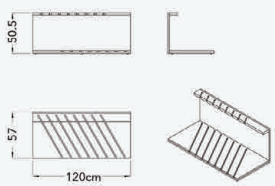

BC130B

CREDLES

Code	Stand Size	Panels	Panel Size	Max	Packing	Total
	Cm	Qty	Cm	Kg	Cm	Kg
BC130B01	55*147*90	21	20*120	-	-	-

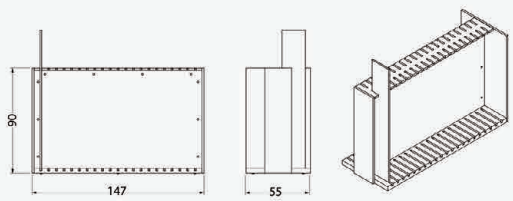

NEW

BC132A

CREDLES

Code	Stand Size	Panels	Panel Size	Max	Packing	Total
	Cm	Qty	Cm	Kg	Cm	Kg
BC132A01	40*96*59	12	18*50	-	-	-

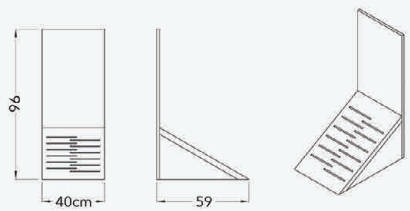

BC151A

CREDLES

Code	Stand Size	Panels	Panel Size	Max	Packing	Total
	Cm	Qty	Cm	Kg	Cm	Kg
BC151A01	51*118*65	10	45*45	-	-	-
BC151A02	51*118*65	10	45*90	-	-	
BC151A03	51*118*65	10	60*60	-	-	

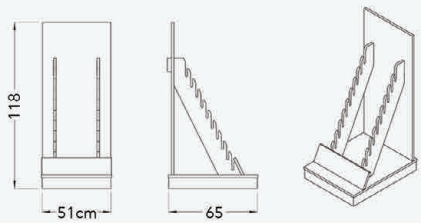

BC202A

CREDLES

Code	Stand Size	Panels	Panel Size	Max	Packing	Total
	Cm	Qty	Cm	Kg	Cm	Kg
BC202A01	22*47*21	10	15*15	-	-	-

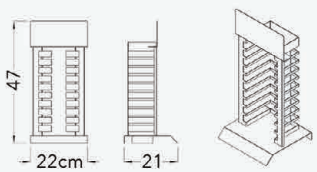

BC202B

CREDLES

Code	Stand Size	Panels	Panel Size	Max	Packing	Total
	Cm	Qty	Cm	Kg	Cm	Kg
BC202B01	42*47*21	20	15*15	-	-	-

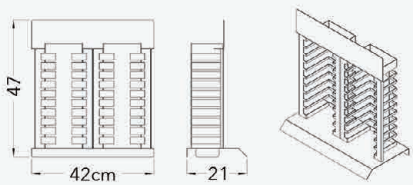

BC202C

CREDLES

Code	Stand Size	Panels	Panel Size	Max	Packing	Total
	Cm	Qty	Cm	Kg	Cm	Kg
BC202C01	62*47*21	30	15*15	-	-	-

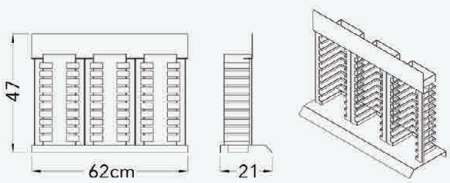

BC202D

CREDLES

Code	Stand Size	Panels	Panel Size	Max	Packing	Total
	Cm	Qty	Cm	Kg	Cm	Kg
BC202D01	82*47*21	40	15*15	-	-	-

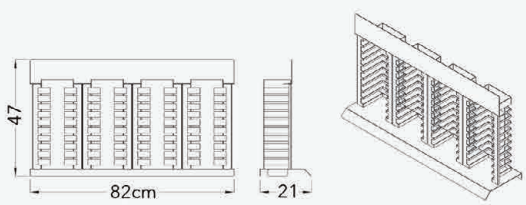

BC210A

CREDLES

Code	Stand Size	Panels	Panel Size	Max	Packing	Total
	Cm	Qty	Cm	Kg	Cm	Kg
BC210A01	30*57*38	8+8	12.5*16.5	-	-	-
BC210A02	30*57*38	8+8	26.5*5	-	-	-

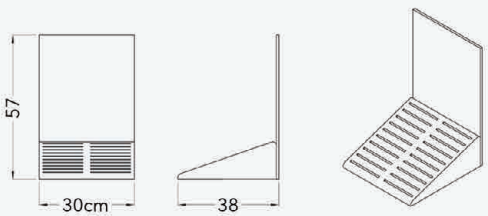

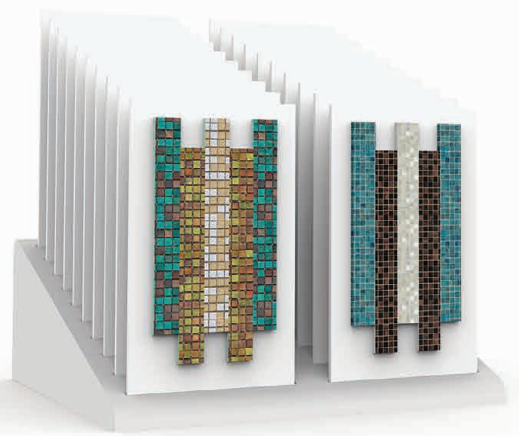

BC211A

CREDLES

Code	Stand Size	Panels	Panel Size	Max	Packing	Total
	Cm	Qty	Cm	Kg	Cm	Kg
BC211A01	56*6*42	36	12.5*16.5	-	-	-
BC211A02	56*6*42	36	12.5*18.5	-	-	-

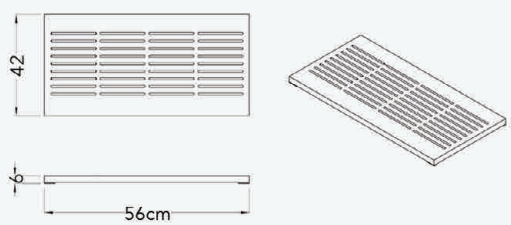

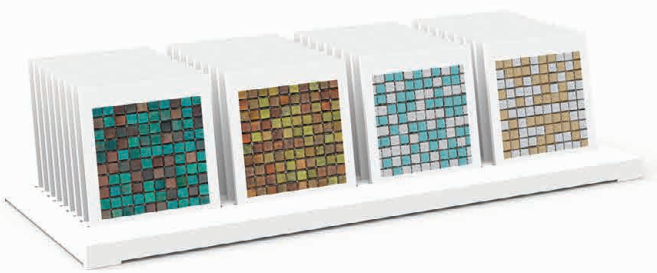

BC212A

CREDLES

Code	Stand Size	Panels	Panel Size	Max	Packing	Total
	Cm	Qty	Cm	Kg	Cm	Kg
BC212A01	32*57*38	8+8+6	15*25	-	-	-

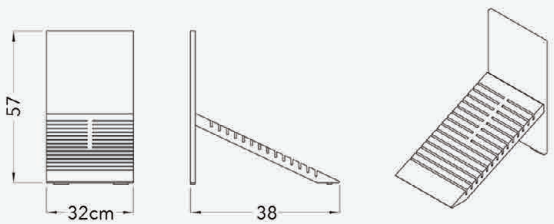

BC204A

CREDLES

Code	Stand Size	Panels	Panel Size	Max	Packing	Total
	Cm	Qty	Cm	Kg	Cm	Kg
BC204A01	45*14*26	1	60*120	-	-	-
BC204A02	45*14*26	1	90*135	-	-	-

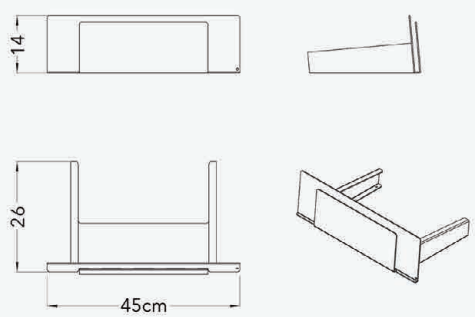

BC206A

CREDLES

Code	Stand Size	Panels	Panel Size	Max	Packing	Total
	Cm	Qty	Cm	Kg	Cm	Kg
BC206A01	27*38.5*15.5	-	A4	-	-	-

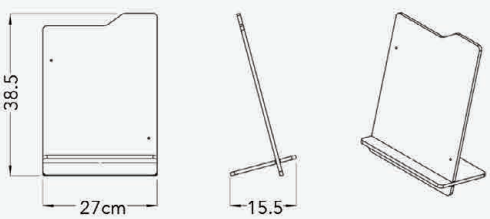

STANDS

BR

STANDS
39
67

Stand A

STAND A

STANDS

BR001A

STANDS

Code	Stand Size	Panels	Panel Size	Max	Packing	Total
	Cm	Qty	Cm	Kg	Cm	Kg
BR001A01	64*223*138	5*2	101*193	-	147*68*230	-
BR001A02	64*231*138	5*2	101*201	-	147*68*231	-
BR001A05	117*223*138	10*2	101*193	-	147*116*230	-
BR001A06	117*231*138	10*2	101*201	-	147*116*231	-

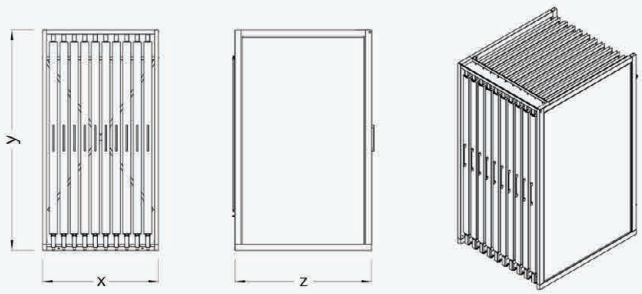

BIG SIZE

BR001E

STANDS

Code	Stand Size	Panels	Panel Size	Max	Packing	Total
	Cm	Qty	Cm	Kg	Cm	Kg
BR001E01	116*270*160	10*2	121*241	-	-	-
BR001E02	63*290*160	5*2	121*261	-	-	-
BR001E03	63*300*160	5*2	121*271	-	-	-
BR001E04	63*310*160	5*2	121*281	-	-	-
BR001E05	116*330*160	10*2	121*301	-	-	-
BR001E06	63*270*160	5*2	121*241	-	-	-

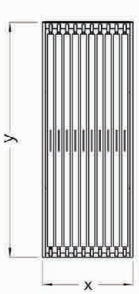

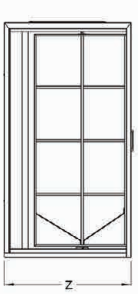

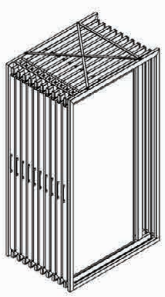

VERTICAL, PULL, ROTATING

NEW

BR001M

STANDS

Code	Stand Size	Panels	Panel Size	Max	Packing	Total
	Cm	Qty	Cm	Kg	Cm	Kg
BR001M01	63*283*163	6*8	60*120	-	-	-
BR001M02	63*284*163	5*8	60*120	-	-	-
BR001M04	95*284*178	16*8	60*60	-	-	-
BR001M05	74*284*178	16*5	60*60	-	-	-

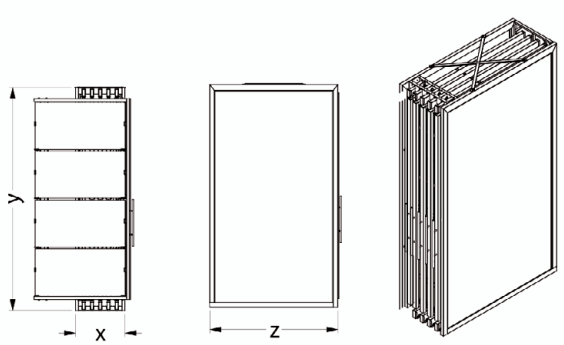

BR002A

STANDS

Code	Stand Size	Panels	Panel Size	Max	Packing	Total
	Cm	Qty	Cm	Kg	Cm	Kg
BR002A01	86*212*133	7*2	101*193	-	141*88*230	-
BR002A02	86*220*133	7*2	101*201	-	141*88*231	-
BR002A03	107*212*133	9*2	101*193	-	141*108*230	-
BR002A04	107*220*133	9*2	101*201	-	141*108*231	-

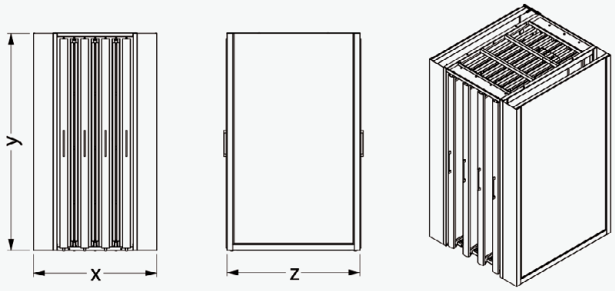

BR003A

STANDS

Code	Stand Size	Panels	Panel Size	Max	Packing	Total
	Cm	Qty	Cm	Kg	Cm	Kg
BR003A01	64*212*127	5*2	101*193	-	136*68*230	-
BR003A02	64*220*127	5*2	101*201	-	136*68*230	-
BR003A05	117*212*127	10*2	101*193	-	136*114*230	-
BR003A06	117*220*127	10*2	101*201	-	136*114*230	-

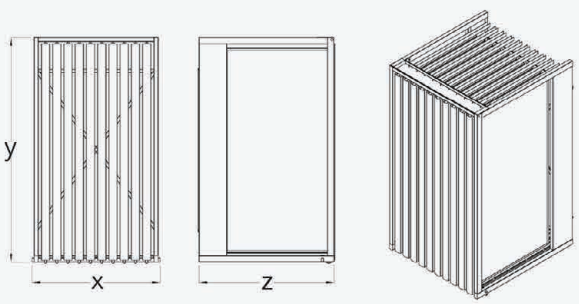

BIG SIZE

BR003E

STANDS

Code	Stand Size	Panels	Panel Size	Max	Packing	Total
	Cm	Qty	Cm	Kg	Cm	Kg
BR003E01	63*134*264	5*2	101*241	-		
BR003E02	63*134*274	5*2	101*251	-		
BR003E03	63*134*284	5*2	101*261	-		
BR003E04	63*134*294	5*2	101*271	-		
BR003E05	63*134*264	5*2	121*241	-		
BR003E06	63*134*274	5*2	121*251	-	-	-

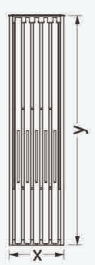

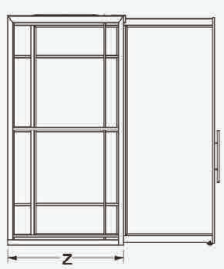

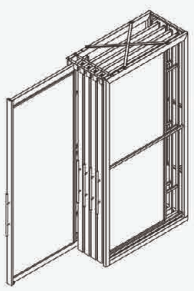

NEW

BR003N

STANDS

Code	Stand Size	Panels	Panel Size	Max	Packing	Total
	Cm	Qty	Cm	Kg	Cm	Kg
BR003N01	85*259*145	7*2		-		

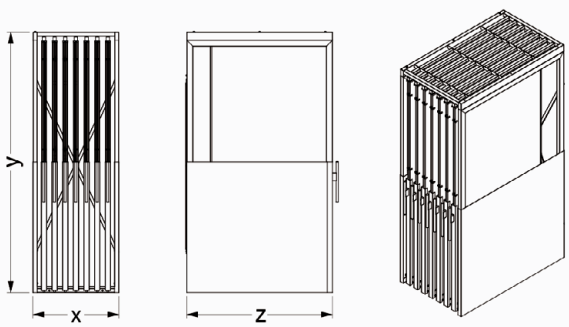

STANDS

STANDS

BR

STANDS
51
80

Stand E

STAND E

BR004A

RIGHT

STANDS

Code	Stand Size	Panels	Panel Size	Max	Packing	Total
	Cm	Qty	Cm	Kg	Cm	Kg
BR004A01	239*225*101	12+2	101*193	-	132*91*230	-
BR004A02	239*233*101	12+2	101*201	-	132*91*230	-
BR004A03		14*2	101*193	-	-	-
BR004A04	239*226*123	15*2	101*193	-	-	-
BR004A05	279*226*101	15*2	101*193	-	-	-

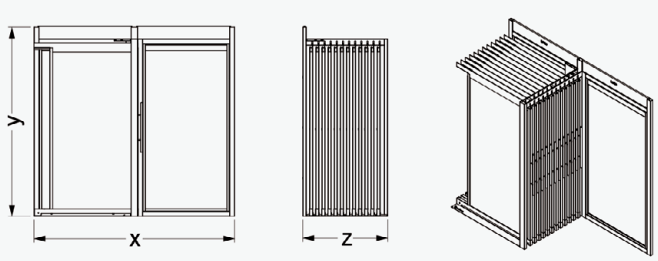

BR004B

LEFT

STANDS

Code	Stand Size	Panels	Panel Size	Max	Packing	Total
	Cm	Qty	Cm	Kg	Cm	Kg
BR004B01	239*225*101	12+2	101*193	-	132*91*230	-
BR004B02	239*233*101	12+2	101*201	-	132*91*230	-

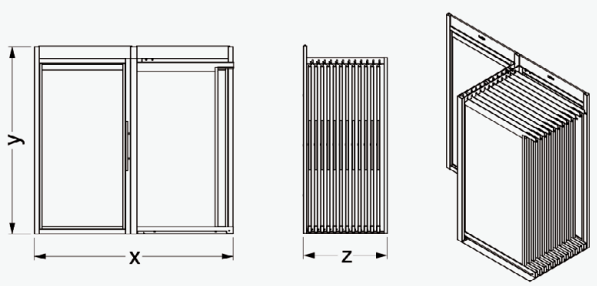

BR004C DOUBLE

STANDS

Code	Stand Size	Panels	Panel Size	Max	Packing	Total
	Cm	Qty	Cm	Kg	Cm	Kg
BR004C01	363*225*101	24+3	101*193	-	132*91*230	-
BR004C02	363*233*101	23+3	101*201	-		
BR004C03	363*233*115	28+3	101*193	-		
BR004C04	363*233*138	34+3	101*193	-		
BR004C05	363*241*108	30+3	101*201	-		

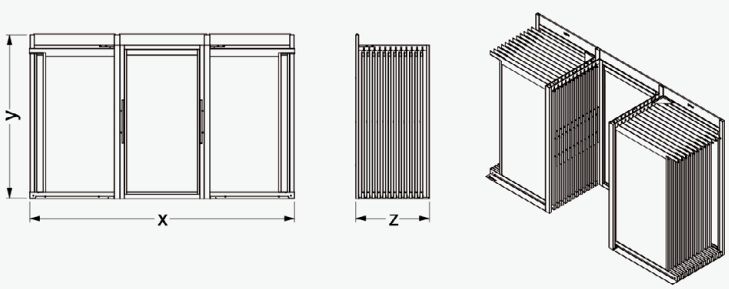

BR005A

RIGHT

STANDS

Code	Stand Size	Panels	Panel Size	Max	Packing	Total
	Cm	Qty	Cm	Kg	Cm	Kg
BR005A01	252*209*92	12+2	101*193	-	136*85*230	-
BR005A02	252*217*92	12+2	101*201	-	136*85*230	-

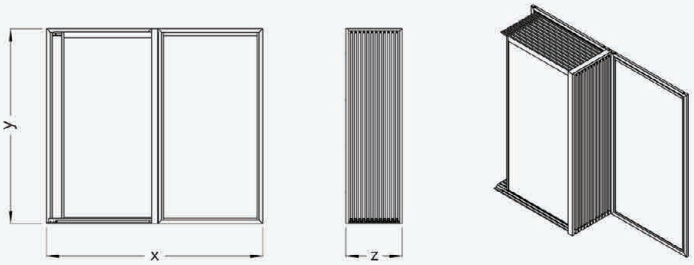

VERTICAL, PULL

BR005B

LEFT

STANDS

Code	Stand Size	Panels	Panel Size	Max	Packing	Total
	Cm	Qty	Cm	Kg	Cm	Kg
BR005B01	252*209*92	12+2	101*193	-	136*85*230	-
BR005B02	252*217*92	12+2	101*201	-	136*85*230	-

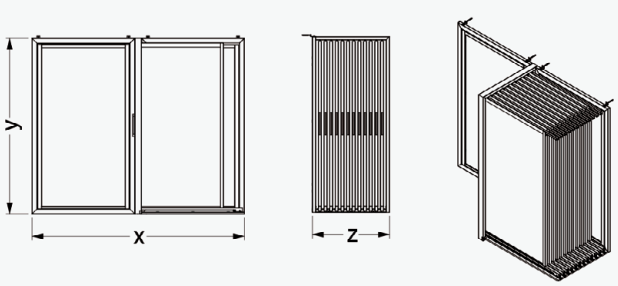

BR005C DOUBLE

STANDS

Code	Stand Size	Panels	Panel Size	Max	Packing	Total
	Cm	Qty	Cm	Kg	Cm	Kg
BR005C01	382*209*92	24+3	101*193	-	136*85*230	-
BR005C02	382*217*92	24+3	101*201	-	136*85*230	-
BR005C03	382*216*98	26+3	101*201	-	-	-
BR005C04	442*256*98	26+3	121*241	-	-	-

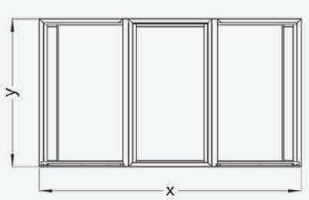

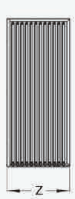

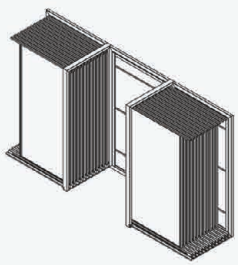

BR006A

RIGHT

STANDS

Code	Stand Size	Panels	Panel Size	Max	Packing	Total
	Cm	Qty	Cm	Kg	Cm	Kg
BR006A01	248*208*85	10+2	101*193	-	140*76*230	-
BR006A02	248*216*85	10+2	101*201	-	140*76*230	-
BR006A03	248*242*85	10+2	101*227	-	140*76*244	-
BR006A04	248*256*85	10+2	101*241	-	140*76*256	-
BR006A05	288*216*85	10+2	101*261	-	165*76*230	-
BR006A06	288*256*85	10+2	101*281	-	165*76*256	-
BR006A07	248*316*85	10+2	101*281	-	165*76*256	-
BR006A08	288*208*85	10+2	121*193	-		-
BR006A09	288*216*85	10+2	121*201	-		-
BR006A10	288*242*85	10+2	121*227	-		-

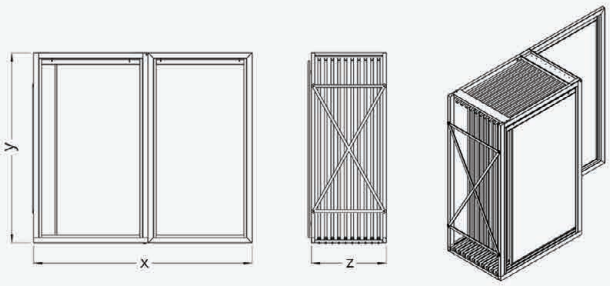

BR006B

LEFT

STANDS

Code	Stand Size	Panels	Panel Size	Max	Packing	Total
	Cm	Qty	Cm	Kg	Cm	Kg
BR006B01	248*208*85	10+2	101*193	-	140*76*230	-
BR006B02	248*216*85	10+2	101*201	-	140*76*230	-
BR006B03	248*242*85	10+2	101*227	-	140*76*244	-
BR006B04	248*256*85	10+2	101*241	-	140*76*256	-
BR006B05	288*216*85	10+2	121*201	-	165*76*230	-
BR006B06	288*256*85	10+2	121*241	-	165*76*256	-
BR006B07	248*316*85	10+2	101*301	-	165*76*256	-
BR006B08	288*208*85	10+2	121*193	-		-
BR006B09	288*216*85	10+2	121*201	-		-
BR006B10	288*242*85	10+2	121*227	-		-

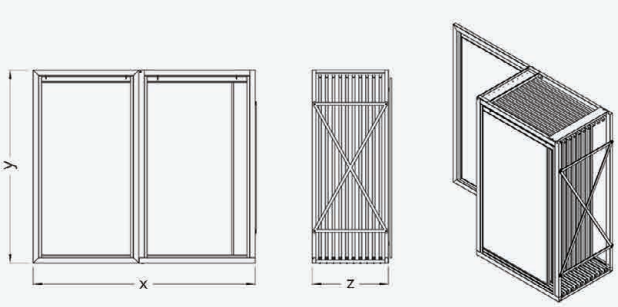

VERTICAL, PULL

BR006C DOUBLE

STANDS

Code	Stand Size	Panels	Panel Size	Max	Packing	Total
	Cm	Qty	Cm	Kg	Cm	Kg
BR006C01	378*208*85	20+3	101*193	-	139*134*230	-
BR006C02	378*216*85	20+3	101*201	-	139*134*230	-
BR006C03	378*242*85	20+3	101*227	-	139*134*244	-
BR006C04	378*256*85	20+3	101*241	-	139*134*260	-
BR006C05	438*216*85	20+3	121*261	-	160*134*230	-
BR006C06	378*296*85	20+3	121*281	-	160*134*260	-
BR006C07	378*316*85	20+3	101*301	-		-
BR006C08	438*208*85	20+3	121*193	-		-
BR006C09	438*216*85	20+3	121*201	-		-
BR006C10	438*242*85	20+3	121*227	-		-

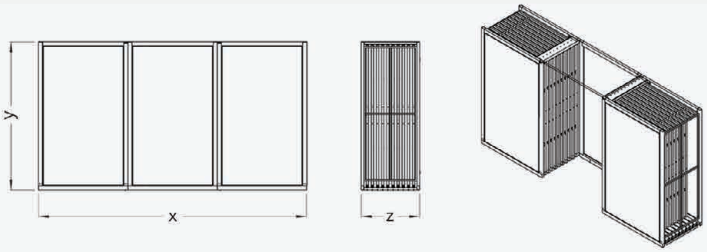

BR006D

RIGHT

STANDS

Code	Stand Size	Panels	Panel Size	Max	Packing	Total
	Cm	Qty	Cm	Kg	Cm	Kg
BR006D01	306*209*98	24+1	101*193	-	-	-
BR006D02	306*217*98	24+1	101*201	-	-	-
BR006D03	306*233*98	24+1	101*227	-	-	-
BR006D04	306*247*98	24+1	101*241	-	-	-

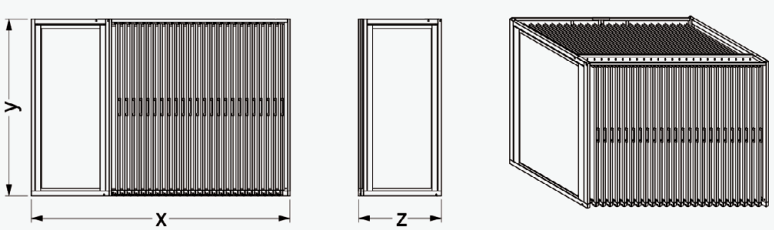

BR006E

LEFT

STANDS

Code	Stand Size	Panels	Panel Size	Max	Packing	Total
	Cm	Qty	Cm	Kg	Cm	Kg
BR006E01	306*209*98	24+1	101*193	-	-	-
BR006E02	306*217*98	24+1	101*201	-	-	-
BR006E03	306*233*98	24+1	101*227	-	-	-
BR006E04	306*246*98	24+1	101*241	-	-	-
BR006E05		14+1	101*193	-	-	-

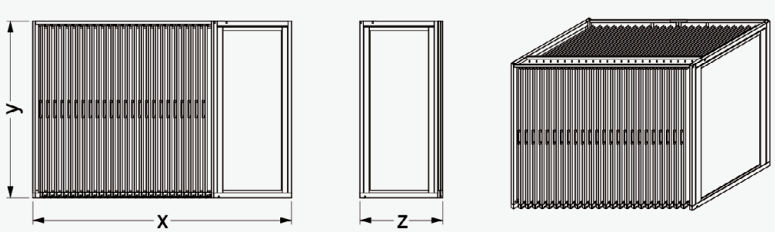

BR008A RIGHT-LEFT

STANDS

Code	Stand Size	Panels	Panel Size	Max	Packing	Total
	Cm	Qty	Cm	Kg	Cm	Kg
BR008A01	228*224*92	10+2	101*193	-		-
BR008A02	227*225*92	10+2	101*201	-		-
BR008A03	228*224*106	12*2	101*193	-	-	-

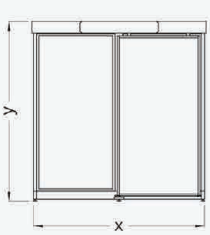

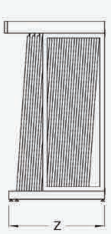

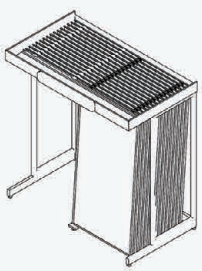

BR008E RIGHT-LEFT

STANDS

Code	Stand Size	Panels	Panel Size	Max	Packing	Total
	Cm	Qty	Cm	Kg	Cm	Kg
BR008E01	291*234*130	10+2	131*201	-		-
BR008E02	351*225*135	10+2	161*193	-		-

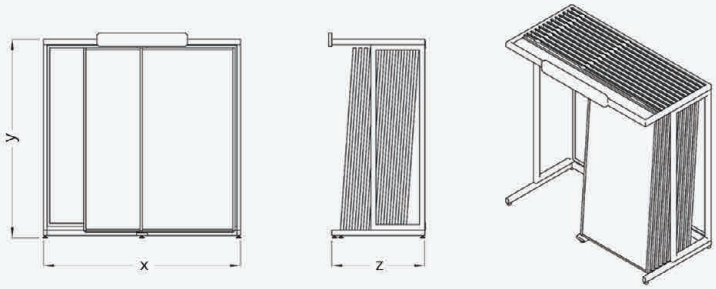

BR008C DOUBLE

STANDS

Code	Stand Size	Panels	Panel Size	Max	Packing	Total
	Cm	Qty	Cm	Kg	Cm	Kg
BR008C01	334*224*106	24+3	101*193	-		-
BR008C02	334*232*106	24+3	101*201	-	120*133*230	-

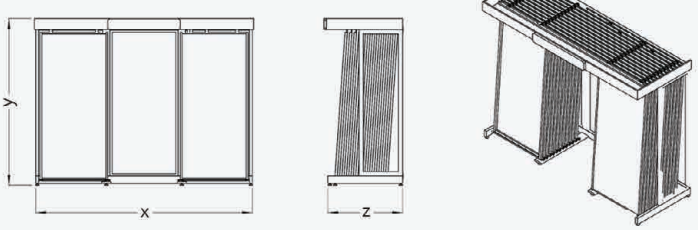

BR008F DOUBLE

STANDS

Code	Stand Size	Panels	Panel Size	Max	Packing	Total
	Cm	Qty	Cm	Kg	Cm	Kg
BR008F01	520*226*148	22+3	161*193	-		-
BR008F02	400*274*158	24+3	121*241	-		-
BR008F03	400*274*118	16+3	121*241	-		-
BR008F04	430*233*148	22+3	131*201	-	-	-
BR008F05	490*253*158	24+3	151*221	-	-	-

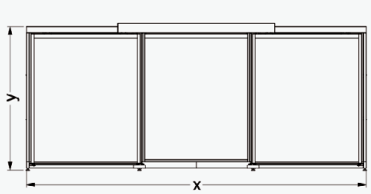

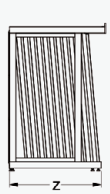

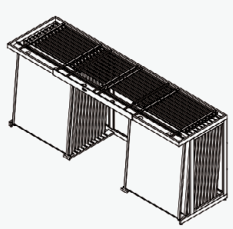

AUTOMATIC SLIDING DISPLAY WITH REMOTE CONTROLLED

NEW

BR008M

TOUCH

STANDS

Code	Stand Size	Panels	Panel Size	Max	Packing	Total
	Cm	Qty	Cm	Kg	Cm	Kg
BR008M01	397*288*115	6+2	181*241	-		-
BR008M02	397*328*115	6+2	181*281	-		-

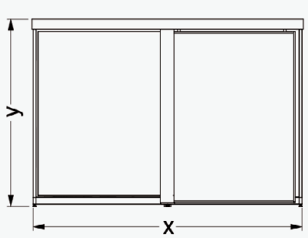

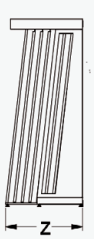

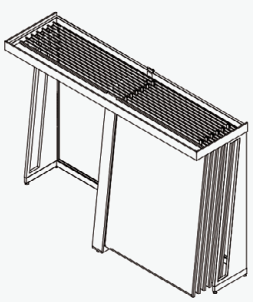

VERTICAL, PULL

BR STANDS

AUTOMATIC SLIDING DISPLAY WITH APPLICATION

NEW

BR008N

TABLET

STANDS

Code	Stand Size	Panels	Panel Size	Max	Packing	Total
	Cm	Qty	Cm	Kg	Cm	Kg
BR008M01	397*288*115	6+2	181*241	-		-
BR008M02	397*328*115	6+2	181*281	-		-

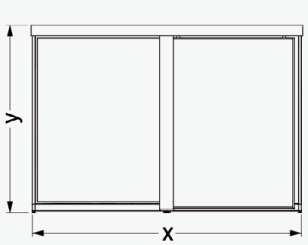

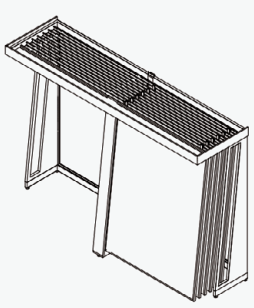

BR009A

RIGHT

STANDS

Code	Stand Size	Panels	Panel Size	Max	Packing	Total
	Cm	Qty	Cm	Kg	Cm	Kg
BR009A01	236*234*126	14+2	101*193	-	136*131*230	-
BR009A02	236*242*126	14+2	101*201	-	136*131*230	-
BR009A03	236*266*126	14+2	101*227	-		

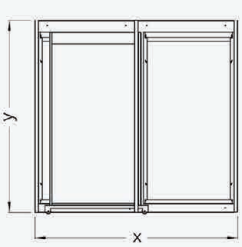

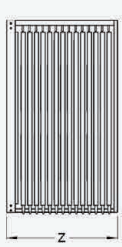

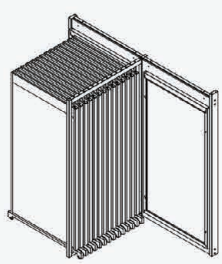

VERTICAL, PULL

BR009B

LEFT

STANDS

Code	Stand Size	Panels	Panel Size	Max	Packing	Total
	Cm	Qty	Cm	Kg	Cm	Kg
BR009B01	236*234*126	14+2	101*193	-	-	-
BR009B02	236*242*126	14+2	101*201	-	-	-
BR009B03	236*268*126	14+2	101*227	-	-	-

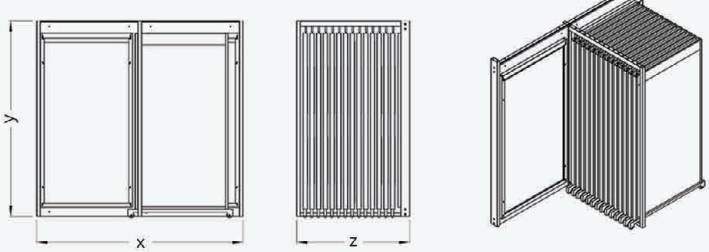

BR009C DOUBLE

STANDS

Code	Stand Size	Panels	Panel Size	Max	Packing	Total
	Cm	Qty	Cm	Kg	Cm	Kg
BR009C01	366*234*126	28+3	101*193	-	136*125*230	-
BR009C02	366*242*126	28+3	101*201	-	136*125*230	-
BR009C03	366*268*126	28+3	101*227	-	136*125*270	-
BR009C04	426*282*133	30+3	121*241	-	-	-

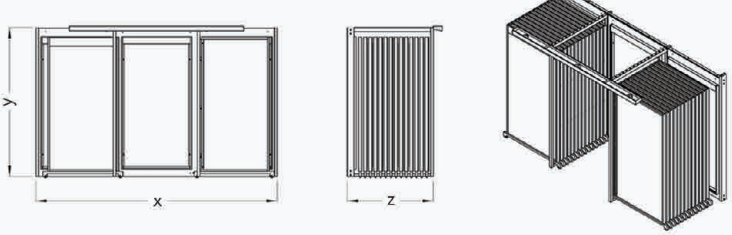

VERTICAL, PULL

BR010A RIGHT-LEFT

STANDS

Code	Stand Size	Panels	Panel Size	Max	Packing	Total
	Cm	Qty	Cm	Kg	Cm	Kg
BR010A01	222*218*96	12+2	101*193	-	120*85*230	-
BR010A02	222*226*96	12+2	101*201	-	120*85*230	-
BR010A03	222*252*96	12+2	101*227	-	120*85*245	-
BR010A04	222*270*95	12+2	101*241	-	120*85*260	-
BR010A05	221*286*96	12+2	101*261	-	120*85*290	-
BR010A06	221*306*96	12+2	101*281	-	120*85*310	-
BR010A07	221*326*96	12+2	101*301	-	120*85*330	-
BR010A08	261*218*96	12+2	121*193	-	139*85*230	-
BR001A09	261*226*96	12+2	121*201	-	139*85*245	-
BR001A10	261*252*96	12+2	121*227	-	139*85*260	-

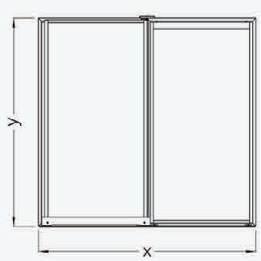

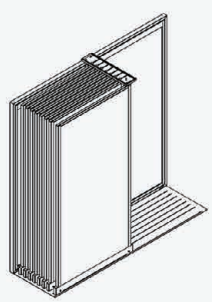

BR010C DOUBLE

STANDS

Code	Stand Size	Panels	Panel Size	Max	Packing	Total
	Cm	Qty	Cm	Kg	Cm	Kg
BR010C01	334*220*94	24+3	101*193	-	120*145*230	-
BR010C02	334*228*94	24+3	101*201	-	120*145*230	-
BR010C03	334*254*94	24+3	101*227	-	120*145*245	-
BR010C04	334*268*94	24+3	101*241	-	120*145*260	-
BR010C05	334*288*94	24+3	101*261	-	120*145*290	-
BR010C06	334*308*94	24+3	101*281	-	120*145*310	-
BR010C07	334*328*94	24+3	101*301	-	120*145*330	-
BR010C08	394*228*94	24+3	121*201	-	139*145*230	-
BR010C09	394*254*94	24+3	121*227	-	139*145*245	-
BR010C10	394*268*94	24+3	121*241	-	139*145*260	-

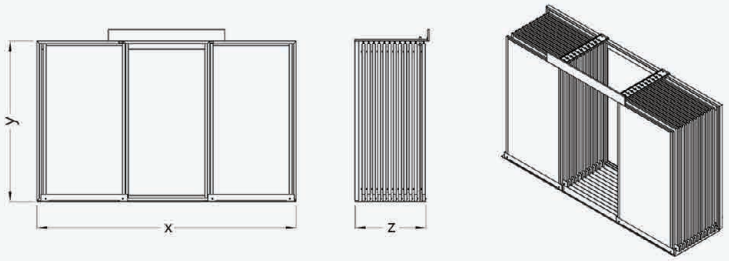

BR011A RIGHT-LEFT

STANDS

Code	Stand Size	Panels	Panel Size	Max	Packing	Total
	Cm	Qty	Cm	Kg	Cm	Kg
BR011A01	240*209*106	14	101*193	-	132*114*245	-
BR011A02	240*217*106	14	101*201	-	132*114*245	-
BR011A03	240*243*106	14	101*227	-	132*114*245	-
BR011A04	240*257*106	14+2	101*241	-	132*114*262	-
BR011A05	240*277*106	14+2	101*261	-	132*114*280	-
BR011A06	240*297*106	14+2	101*281	-	132*114*300	-
BR011A07	240*317*106	14+2	101*301	-	132*114*320	-
BR011A08	280*217*106	14	121*201	-	150*114*226	-
BR011A09	280*243*106	14	121*227	-	150*114*245	
BR011A10	280*257*106	14+2	121*241	-	150*114*256	

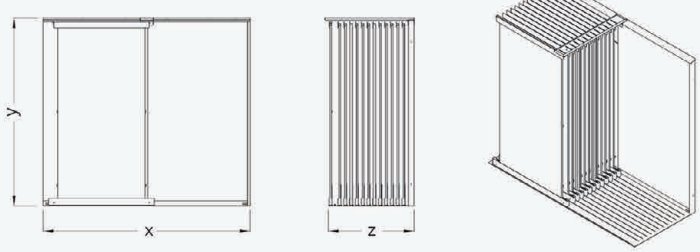

BR011C DOUBLE

STANDS

Code	Stand Size	Panels	Panel Size	Max	Packing	Total
	Cm	Qty	Cm	Kg	Cm	Kg
BR011C01	360*209*106	28	101*193	-	130*115*230	-
BR011C02	360*217*106	28	101*201	-	130*115*230	-
BR011C03	360*243*106	28	101*227	-	130*115*245	-
BR011C04	360*257*106	28+3	101*241	-	130*115*256	-
BR011C05	360*277*106	28+3	101*261	-	130*115*293	-
BR011C06	360*297*106	28+3	101*281	-	130*115*300	-
BR011C07	360*317*106	28+3	101*301	-	130*115*320	-
BR011C08	420*217*106	28	121*201	-	145*115*226	-
BR011C09	420*243*106	28	121*227	-	145*115*245	-
BR011C10	420*257*106	28+3	121*241	-	145*115*256	-

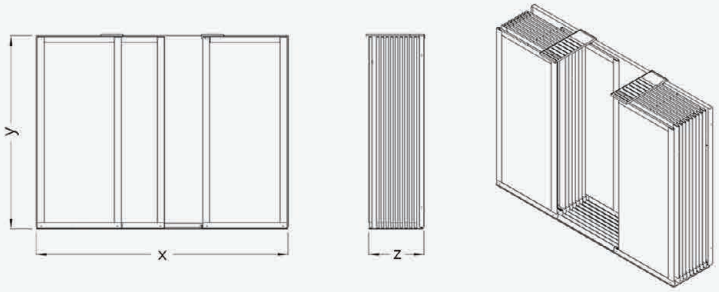

NEW

BR012A

STANDS

Code	Stand Size	Panels	Panel Size	Max	Packing	Total
	Cm	Qty	Cm	Kg	Cm	Kg
BR012A01		6	101*301	-		
BR012A02		6	105*275	-		
BR012A03		6	121*211	-		
BR012A04		6	121*336	-		
BR012A05	245*262*53	6	121*241	-		
BR012A06		6	151*301	-		
BR012A07		6	161*321	-		
BR012A08		6	101*301	-		
BR012A09		6	101*275	-		
BR012A10		6	121*211	-		

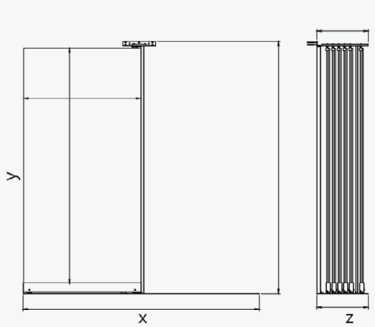

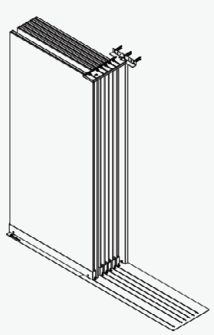

NEW

BR012C

STANDS

Code	Stand Size	Panels	Panel Size	Max	Packing	Total
	Cm	Qty	Cm	Kg	Cm	Kg
BR012C01	365*250*77	6+6	101*301	-		
BR012C02		6+6	105*275	-		
BR012C03		6+6	121*211	-		
BR012C04		6+6	121*336	-		
BR012C05		6+6	122*245	-		
BR012C06		6+6	151*301	-		
BR012C07		6+6	161*321	-		
BR012C08		6+6	101*301	-		
BR012C09		6+6	101*275	-		
BR012C10		6+6	121*211	-		

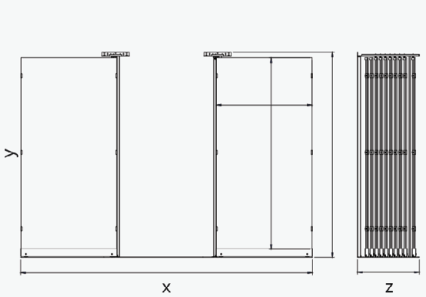

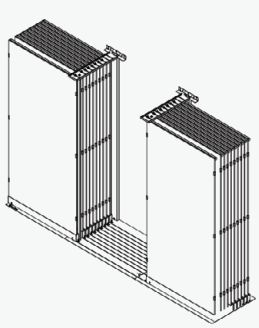

NEW

BR012E

STANDS

Code	Stand Size	Panels	Panel Size	Max	Packing	Total
	Cm	Qty	Cm	Kg	Cm	Kg
BR012E01	270*315*74	6	MIX	-		
BR012E02		6	MIX	-		
BR012E03	273*293*74	6	MIX	-		
BR012E04		4	MIX	-		
BR012E05		3	MIX	-		

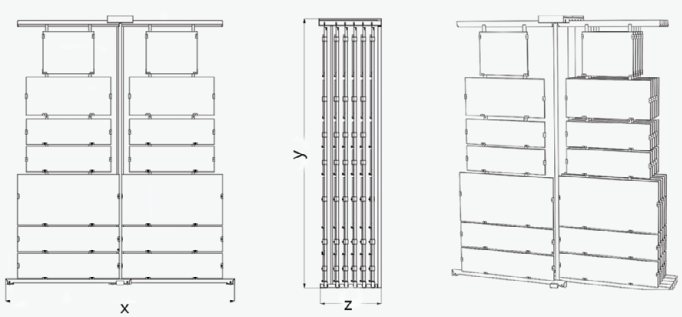

NEW

BR012G

STANDS

Code	Stand Size	Panels	Panel Size	Max	Packing	Total
	Cm	Qty	Cm	Kg	Cm	Kg
BR012G01		6	101*301	-		
BR012G02		6	105*275	-		
BR012G03		6	121*211	-		
BR012G04		6	121*336	-		
BR012G05		6	122*245	-		
BR012G06		6	151*301	-		
BR012G07		6	161*321	-		
BR012G08		6	101*301	-		
BR012G09		6	101*275	-		
BR012G10		6	121*211	-		

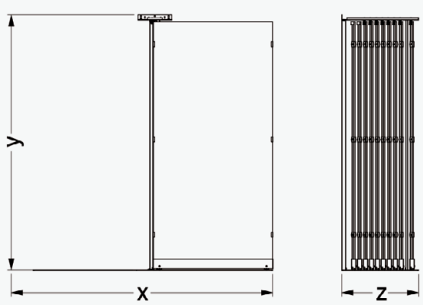

NEW

BR012H

STANDS

Code	Stand Size	Panels	Panel Size	Max	Packing	Total
	Cm	Qty	Cm	Kg	Cm	Kg
BR012H01		6+6	101*301	-		
BR012H02		6+6	105*275	-		
BR012H03		6+6	121*211	-		
BR012H04		6+6	121*336	-		
BR012H05		6+6	122*245	-		
BR012H06		6+6	151*301	-		
BR012H07		6+6	161*321	-		
BR012H08		6+6	101*301	-		
BR012H09		6+6	101*275	-		
BR012H10		6+6	121*211	-		

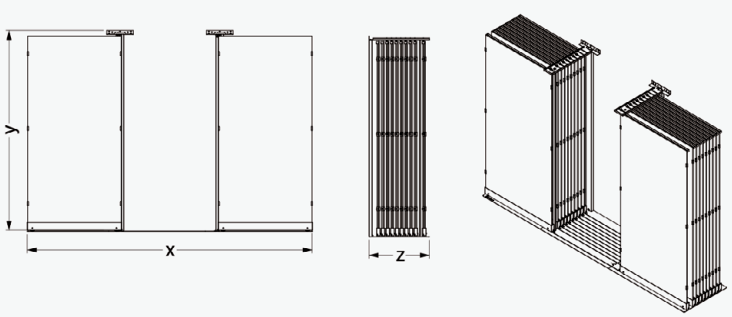

STANDS

STANDS

BR

STANDS
81
92

Stand B

STAND B

BR018A

STANDS

Code	Stand Size	Panels	Panel Size	Max	Packing	Total
	Cm	Qty	Cm	Kg	Cm	Kg
BR018A01	150*227*85	7*2	101*193	-	128*71*230	-
BR018A02	150*235*85	7*2	101*201	-	128*71*230	-

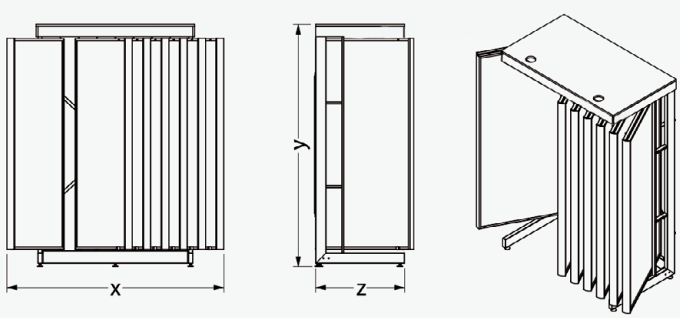

BR018C

STANDS

Code	Stand Size	Panels	Panel Size	Max	Packing	Total
	Cm	Qty	Cm	Kg	Cm	Kg
BR018C01	296*227*85	14*2	101*193	-	128*113*232	-
BR018C02	296*235*85	14*2	101*201	-	128*113*232	-

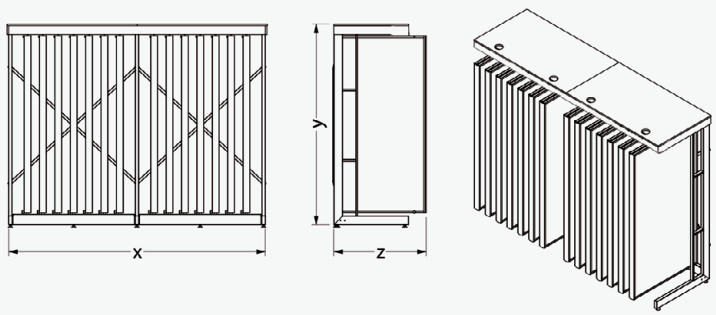

NEW

BR018E

STANDS

Code	Stand Size	Panels	Panel Size	Max	Packing	Total
	Cm	Qty	Cm	Kg	Cm	Kg
BR018E01	150*227*85	7*2	101*193	-	128*71*230	-
BR018E02	150*235*85	7*2	101*201	-	128*71*230	-

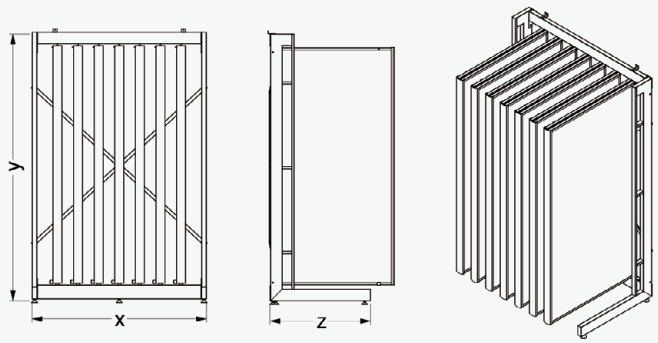

NEW

BR018F

STANDS

Code	Stand Size	Panels	Panel Size	Max	Packing	Total
	Cm	Qty	Cm	Kg	Cm	Kg
BR018F01	296*227*85	14*2	101*193	-	128*113*232	-
BR018F02	296*235*85	14*2	101*201	-	128*113*232	-

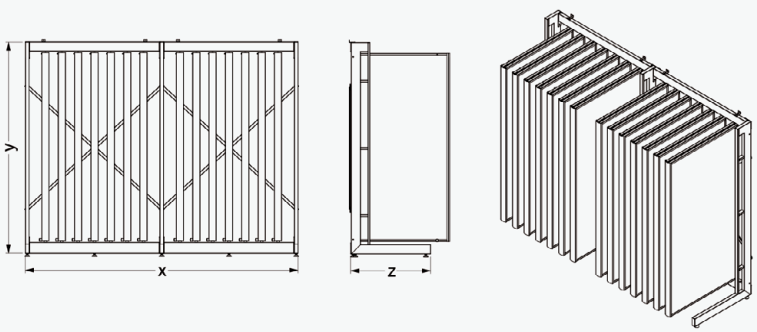

BR019A

STANDS

Code	Stand Size	Panels	Panel Size	Max	Packing	Total
	Cm	Qty	Cm	Kg	Cm	Kg
BR019A01	185*217*75	5*2	101*193	-	128*63*230	-
BR019A02	185*225*75	5*2	101*201	-	128*63*230	-

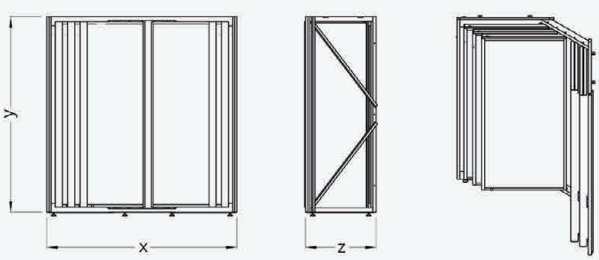

BR019B

STANDS

Code	Stand Size	Panels	Panel Size	Max	Packing	Total
	Cm	Qty	Cm	Kg	Cm	Kg
BR019B01	225*232*55	8*2	81*201	-	156*101*230	-

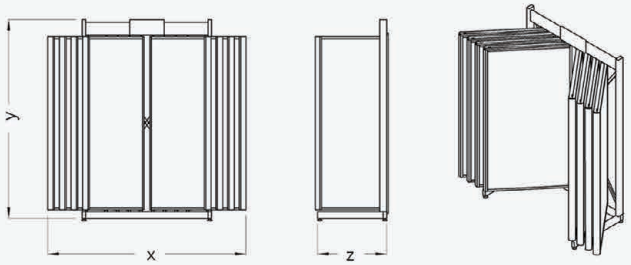

NEW

BR019C

STANDS

Code	Stand Size	Panels	Panel Size	Max	Packing	Total
	Cm	Qty	Cm	Kg	Cm	Kg
BR019C01	400*222*106	20*2	101*193	-	-	-
BR019C02	400*230*106	20*2	101*201	-	-	-

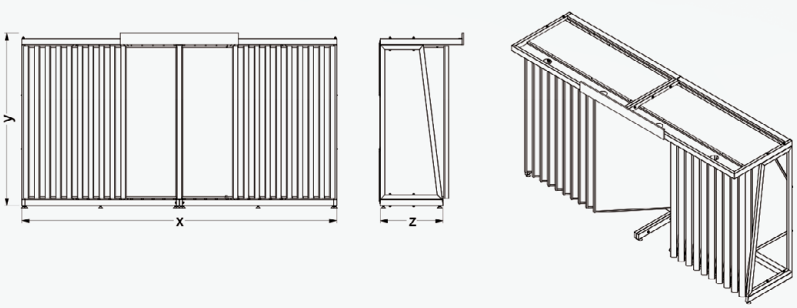

BR020A

STANDS

Code	Stand Size	Panels	Panel Size	Max	Packing	Total
	Cm	Qty	Cm	Kg	Cm	Kg
BR020A01	328*231*120	24+2	101*193	-	120*116*230	-
BR020A02	328*239*120	24+2	101*201	-	120*116*230	-

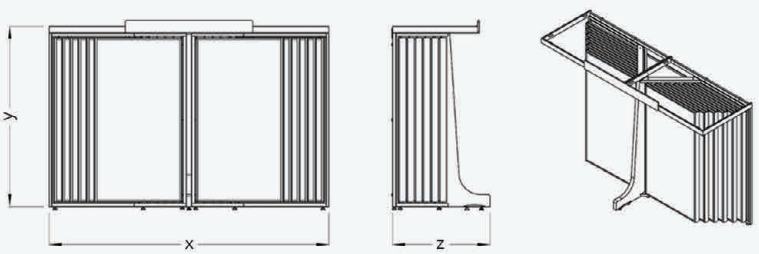

BR020B

STANDS

Code	Stand Size	Panels	Panel Size	Max	Packing	Total
	Cm	Qty	Cm	Kg	Cm	Kg
BR020B01	328*231*120	12*2	101*193	-	-	-
BR020B02		12*2	101*201	-	-	-

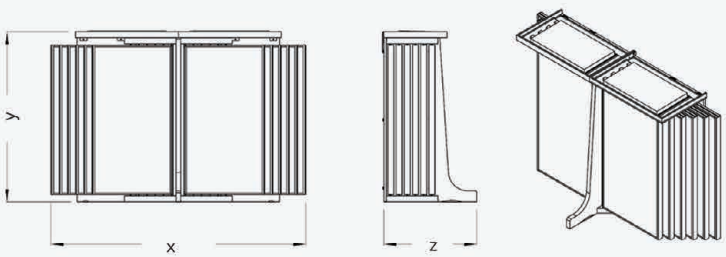

BR021A

STANDS

Code	Stand Size	Panels	Panel Size	Max	Packing	Total
	Cm	Qty	Cm	Kg	Cm	Kg
BR021A01	328*231*115	24+2	101*193	-	120*98*230	-
BR021A02	328*239*115	24+2	101*201	-	120*98*230	-

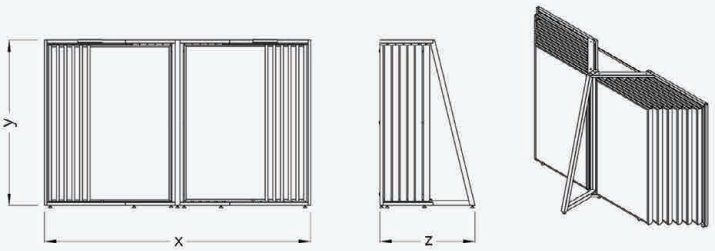

BR021C

STANDS

Code	Stand Size	Panels	Panel Size	Max	Packing	Total
	Cm	Qty	Cm	Kg	Cm	Kg
BR021C01	298*231*120	10*2	101*193	-	139*90*230	-
BR021C02	298*231*120	10*2	101*201	-	139*90*230	-

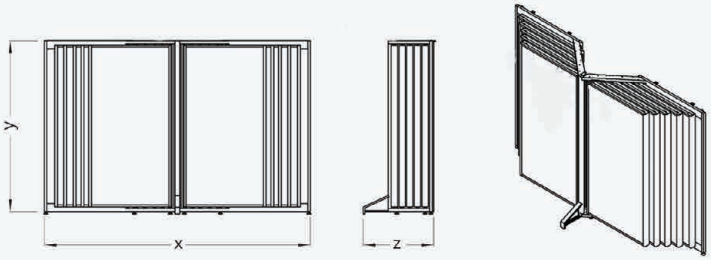

NEW

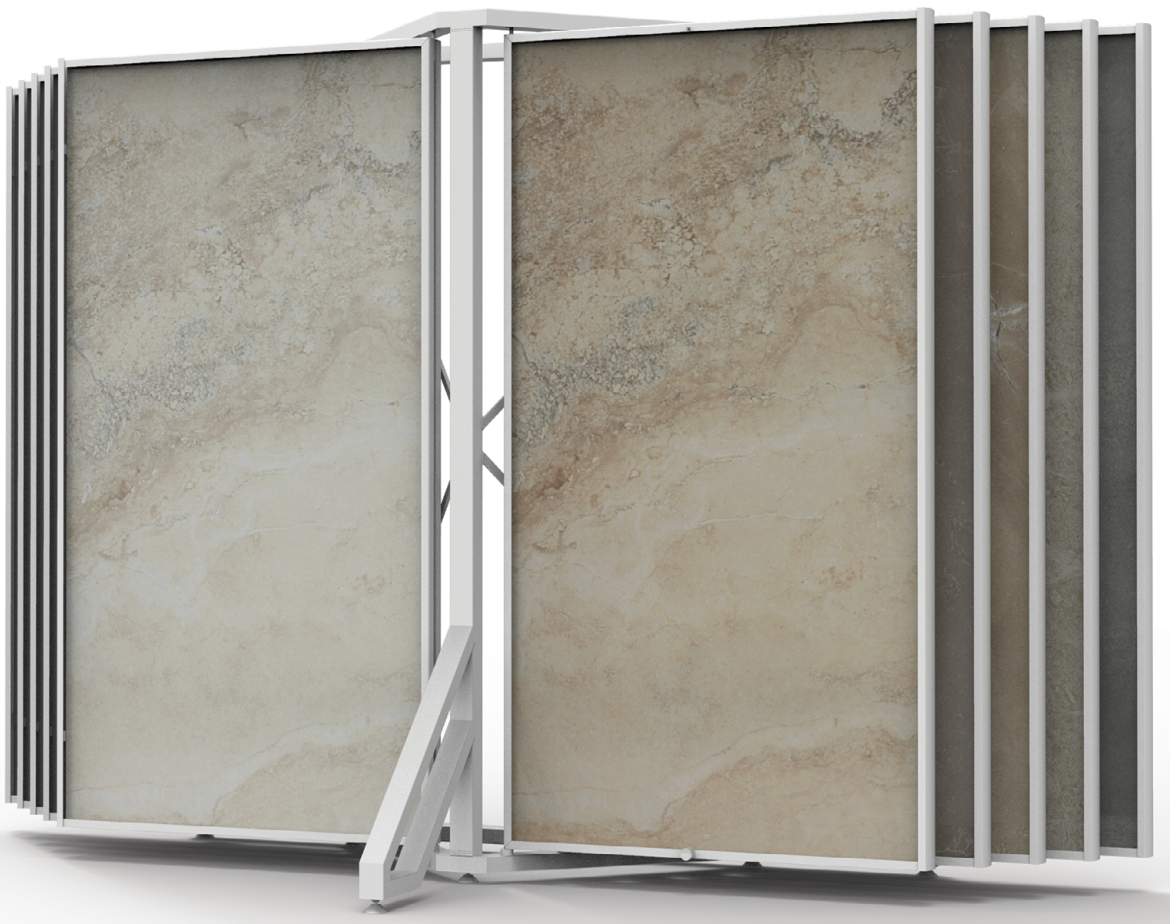

BR021M

STANDS

Code	Stand Size	Panels	Panel Size	Max	Packing	Total
	Cm	Qty	Cm	Kg	Cm	Kg
BR021M01	298*231*120	10*2	101*193	-	139*90*230	-

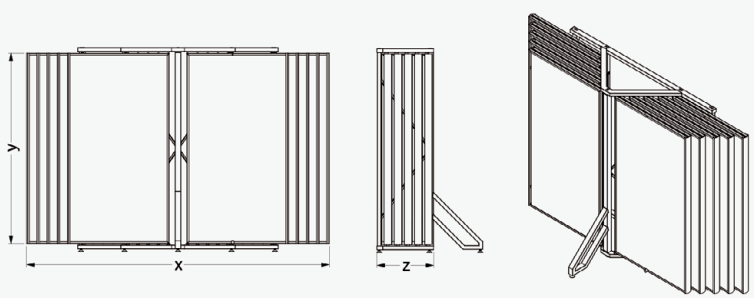

NEW

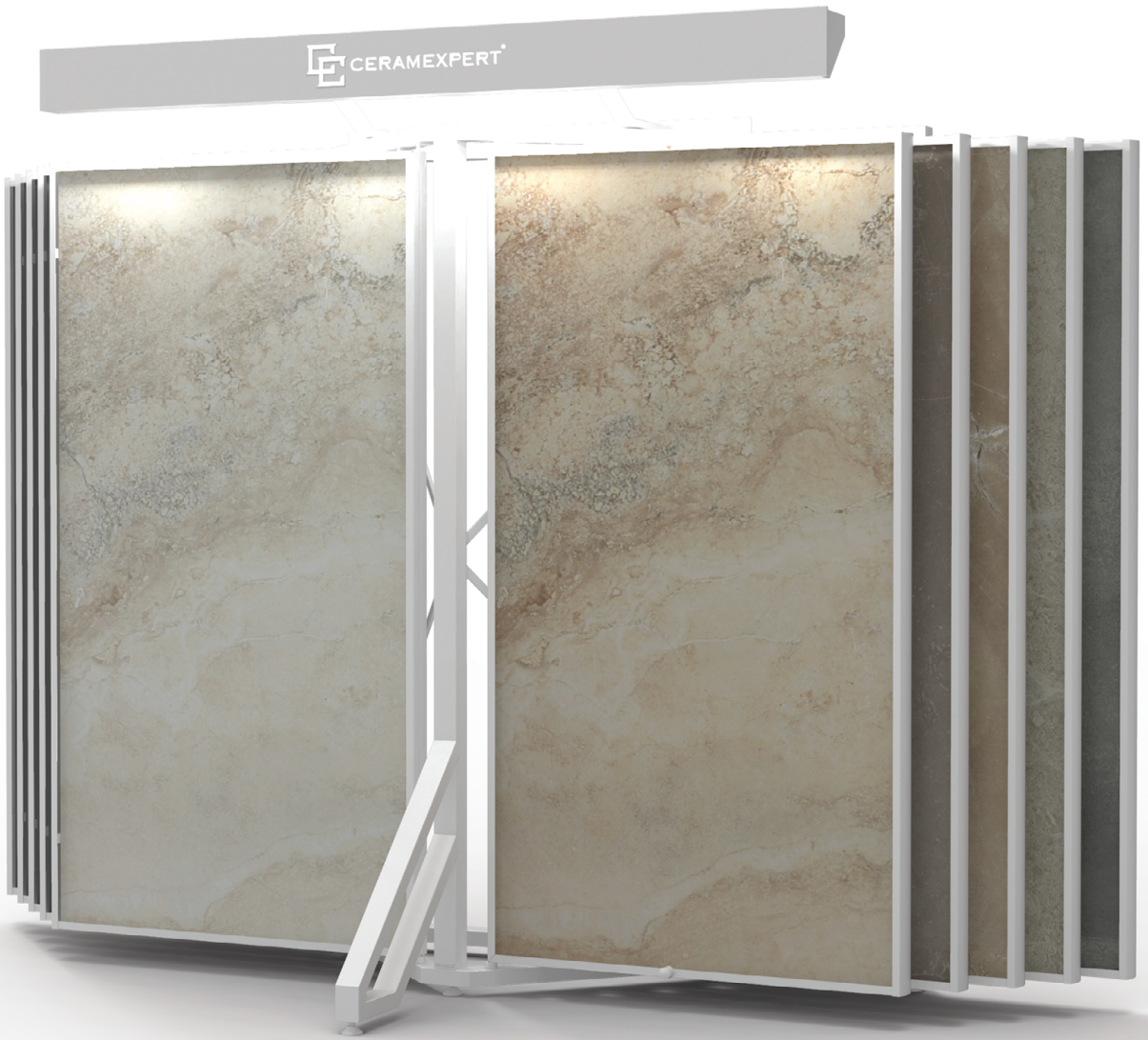

BR021M

STANDS

Code	Stand Size	Panels	Panel Size	Max	Packing	Total
	Cm	Qty	Cm	Kg	Cm	Kg
BR021M01	298*231*120	10*2	101*193	-	139*90*230	-

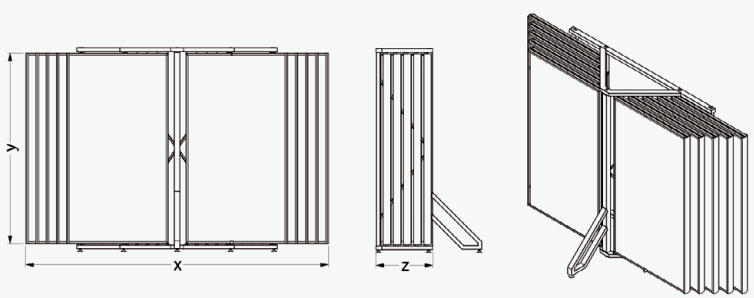

BR022A

STANDS

Code	Stand Size	Panels	Panel Size	Max	Packing	Total
	Cm	Qty	Cm	Kg	Cm	Kg
BR022A01	219*213*113	10*2	101*193	-	120*97*230	-
BR022A02	219*221*113	10*2	101*201	-	120*97*230	-
BR022A03		10*2	124*210	-	-	-
BR022A04		10*2	101*227	-	-	-
BR022A05		12*2	101*193	-	-	-
BR022A06		8*2	101*193	-	-	-

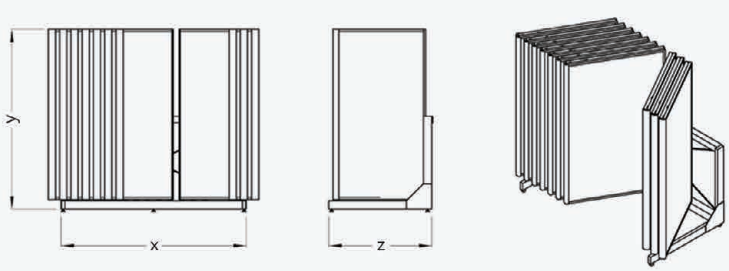

STANDS

HORIZONTAL SLIDING

STAND C

STANDS

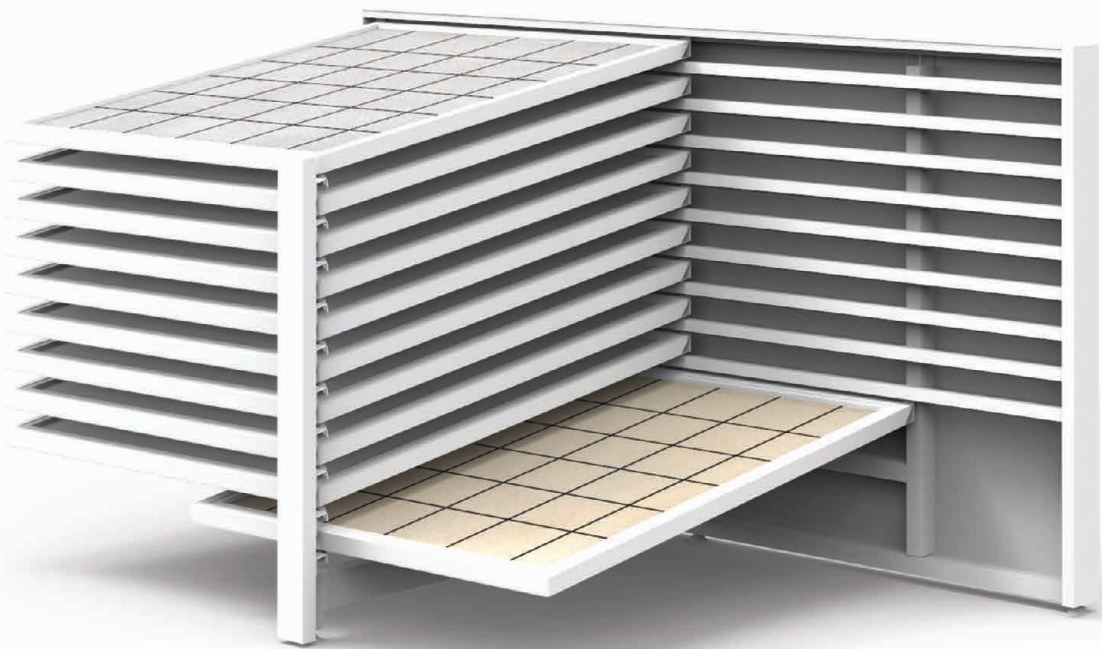

BR013A

10°

STANDS

Code	Stand Size	Panels	Panel Size	Max	Packing	Total
	Cm	Qty	Cm	Kg	Cm	Kg
BR013A01	145*110*70	10	61*61	-	100*69*115	-
BR013A02	145*136*142	10	61*121	-	100*69*274	-
BR013A03	185*136*90	10	81*81	-	120*69*135	-
BR013A04	205*136*100	10	91*91	-	130*69*145	-
BR013A05	205*140*140	10	91*136	-	130*69*290	-
BR013A06	225*140*140	10	101*137	-	140*69*290	-
BR013A07	225*136*122	10	102*102	-	140*69*230	-
BR013A08	225*136*142	10	102*122	-	140*69*274	-
BR013A09	265*136*142	10	121*121	-	143*69*274	-

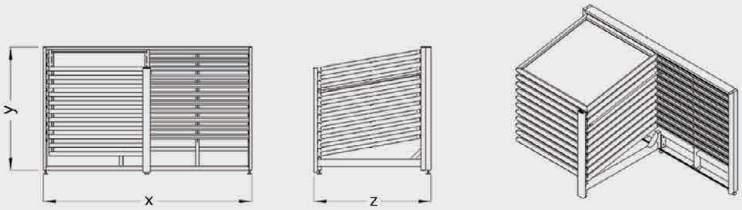

BR013C

10°

STANDS

Code	Stand Size	Panels	Panel Size	Max	Packing	Total
	Cm	Qty	Cm	Kg	Cm	Kg
BR013C01	145*110*134	10+10	61*61	-	-	-
BR013C02	145*136*278	10+10	61*121	-	-	-
BR013C03	185*136*184	10+10	81*81	-	-	-
BR013C04	205*136*194	10+10	91*91	-	-	-
BR013C05	205*140*274	10+10	91*136	-	-	-
BR013C06	225*140*274	10+10	101*137	-	-	-
BR013C07	225*136*238	10+10	102*102	-	-	-
BR013C08	225*136*278	10+10	102*122	-	-	-
BR013C09	265*136*278	10+10	121*121	-	-	-

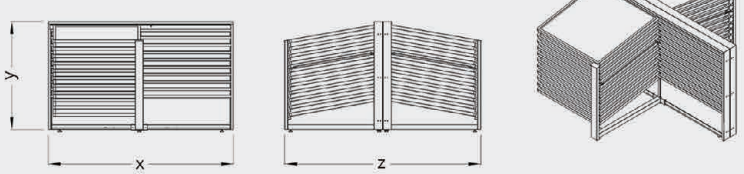

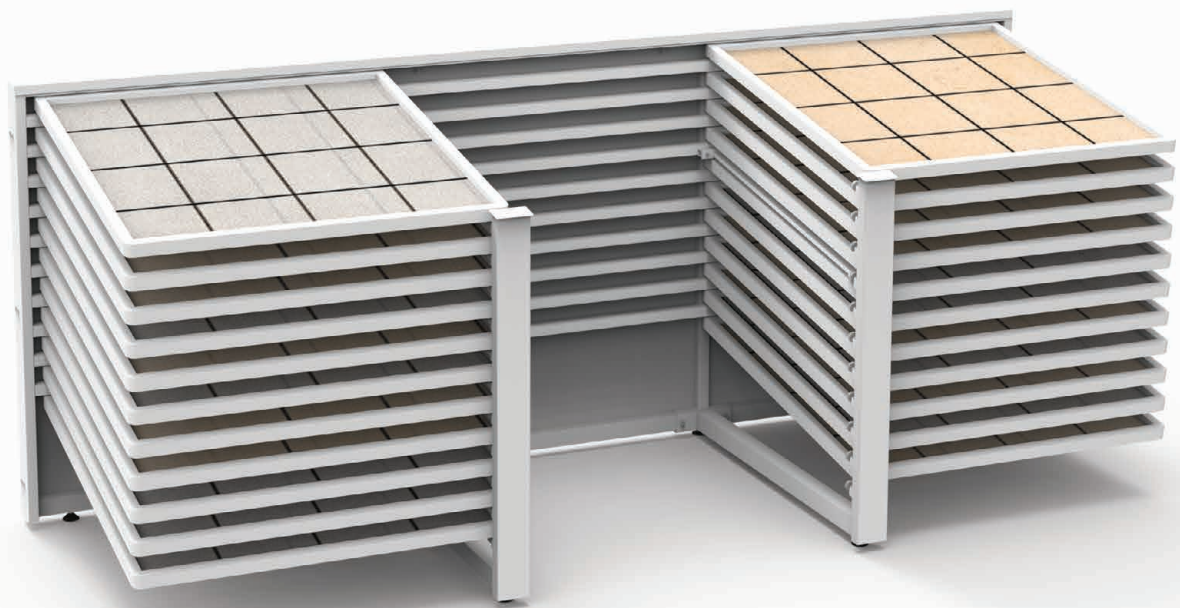

BR013E

10°

STANDS

Code	Stand Size	Panels	Panel Size	Max	Packing	Total
	Cm	Qty	Cm	Kg	Cm	Kg
BR013E01	240*100*70	10+10	61*61	-	-	-
BR013E02	240*136*142	10+10	61*121	-	-	-
BR013E03	300*136*90	10+10	81*81	-	-	-
BR013E04	330*136*100	10+10	91*91	-	-	-
BR013E05	330*140*140	10+10	91*136	-	-	-
BR013E06	360*140*140	10+10	101*137	-	-	-
BR013E07	360*136*122	10+10	102*102	-	-	-
BR013E08	360*136*142	10+10	102*122	-	-	-
BR013E09	400*136*142	10+10	121*121	-	-	-

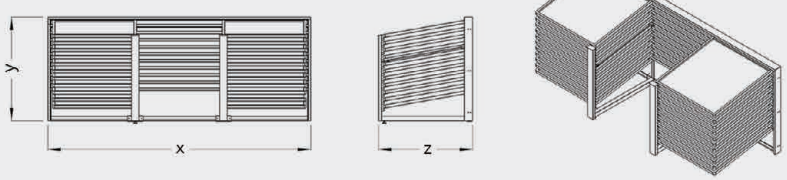

BR013I

10°

STANDS

Code	Stand Size	Panels	Panel Size	Max	Packing	Total
	Cm	Qty	Cm	Kg	Cm	Kg
BR013I01	298*110*70	10+10+10	61*61	-	-	-
BR013I02	298*136*142	10+10+10	61*121	-	-	-
BR013I03	378*136*90	10+10+10	81*81	-	-	-
BR013I04	415*136*100	10+10+10	91*91	-	-	-
BR013I05	415*140*140	10+10+10	91*136	-	-	-
BR013I06	455*140*140	10+10+10	101*137	-	-	-
BR013I07	455*136*122	10+10+10	102*102	-	-	-
BR013I08	455*136*142	10+10+10	102*122	-	-	-
BR013I09	535*136*142	10+10+10	121*121	-	-	-

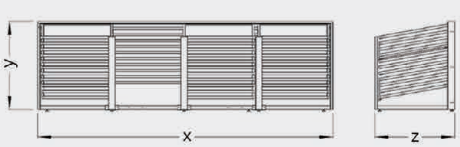

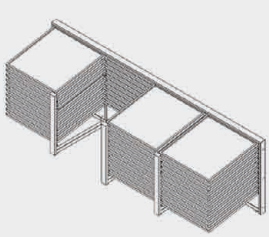

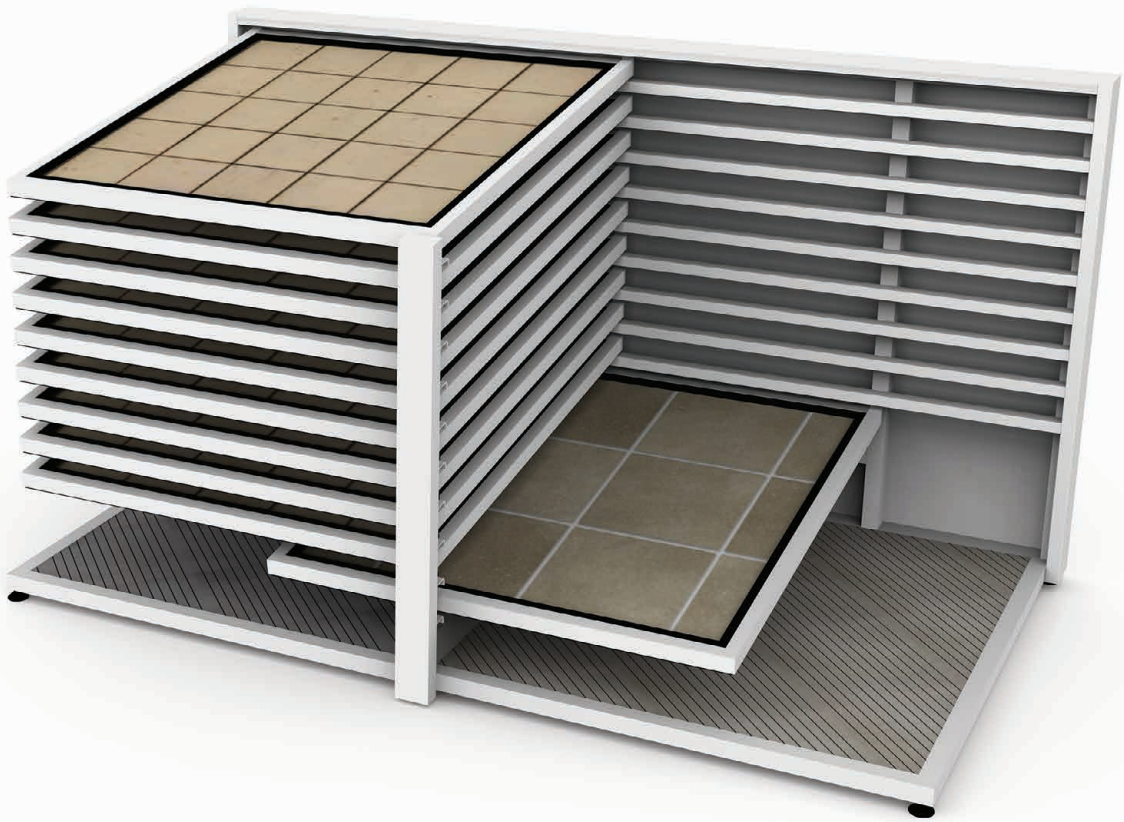

BR014A

10°

STANDS

Code	Stand Size	Panels	Panel Size	Max	Packing	Total
	Cm	Qty	Cm	Kg	Cm	Kg
BR014A01	145*110*70	10	61*61	-	-	-
BR014A02	145*136*142	10	61*121	-	-	-
BR014A03	185*136*90	10	81*81	-	-	-
BR014A04	205*136*100	10	91*91	-	-	-
BR014A05	205*140*140	10	91*136	-	-	-
BR014A06	225*140*140	10	101*137	-	-	-
BR014A07	225*136*122	10	102*102	-	-	-
BR014A08	225*136*142	10	102*122	-	-	-
BR014A09	265*136*142	10	121*121	-	-	-

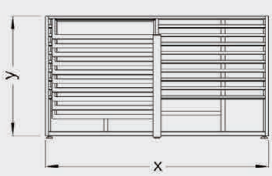

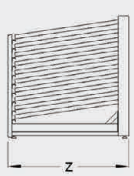

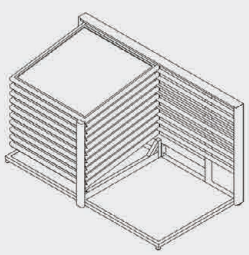

BR015A

42°

STANDS

Code	Stand Size	Panels	Panel Size	Max	Packing	Total
	Cm	Qty	Cm	Kg	Cm	Kg
BR015A01	165*225*60	10	61*61	-	115*73*230	-
BR015A02	165*225*120	10	61*121	-	115*73*274	-
BR015A03	185*225*80	10	81*81	-	125*73*230	-
BR015A04	205*225*90	10	91*91	-	135*73*245	-
BR015A05	205*225*135	10	91*136	-	135*73*290	-
BR015A06	225*225*135	10	101*137	-	159*73*230	-
BR015A07	225*211*120	10	102*102	-	143*73*230	-
BR015A08	225*225*120	10	102*122	-	145*73*230	-
BR015A09	265*225*120	10	121*121	-	143*73*274	-

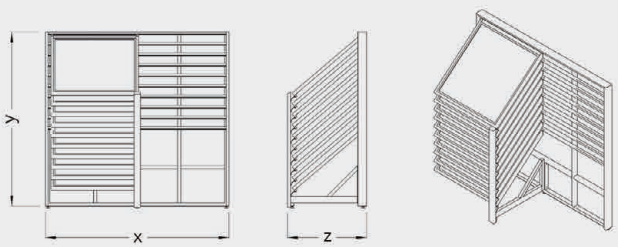

BR015C

42°

STANDS

Code	Stand Size	Panels	Panel Size	Max	Packing	Total
	Cm	Qty	Cm	Kg	Cm	Kg
BR015C01	165*225*114	10+10	61*61	-	-	-
BR015C02	165*225*234	10+10	61*121	-	-	-
BR015C03	185*182*112	10+10	81*81	-	-	-
BR015C04	205*225*174	10+10	91*91	-	-	-
BR015C05	205*225*264	10+10	91*136	-	-	-
BR015C06	225*225*264	10+10	101*137	-	-	-
BR015C07	225*211*234	10+10	102*102	-	-	-
BR015C08	225*225*234	10+10	102*122	-	-	-
BR015C09	265*225*234	10+10	121*121	-	-	-

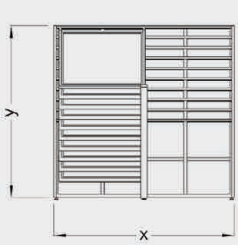

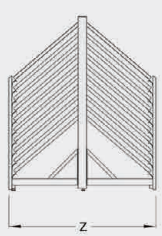

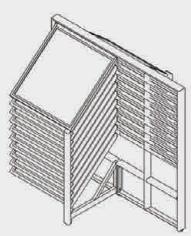

BR015E

42°

STANDS

Code	Stand Size	Panels	Panel Size	Max	Packing	Total
	Cm	Qty	Cm	Kg	Cm	Kg
BR015E01	211*225*60	10+10	61*61	-	143*79*230	-
BR015E02	211*225*120	10+10	61*121	-	143*79*230	-
BR015E03	271*225*80	10+10	81*81	-	143*79*280	-
BR015E04	301*225*90	10+10	91*91	-	143*79*310	-
BR015E05	301*225*135	10+10	91*136	-	159*79*310	-
BR015E06	331*225*135	10+10	101*137	-	159*79*340	-
BR015E07	334*211*120	10+10	102*102	-	143*79*342	-
BR015E08	334*225*120	10+10	102*122	-	145*79*342	-
BR015E09	399*225*120	10+10	121*121	-	143*79*410	-

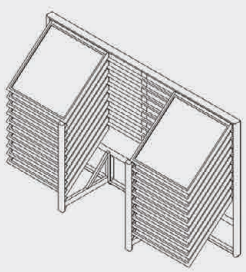

BR015L

42°

STANDS

Code	Stand Size	Panels	Panel Size	Max	Packing	Total
	Cm	Qty	Cm	Kg	Cm	Kg
BR015L01	325*225*115	10+10+10	61*61	-	-	-
BR015L02	325*225*115	10+10+10	61*121	-	-	-

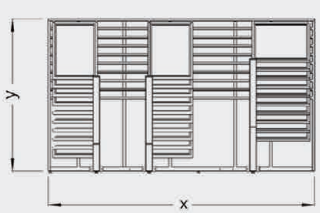

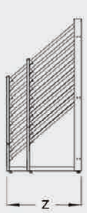

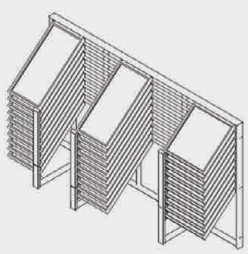

HORIZONTAL, SLIDING

DRAWERS

BD

DRAWERS

197
203

Drawers

DRAWERS

NEW
170 kg

BD001A

DRAWERS

Code	Stand Size	Panels	Panel Size	Max	Packing	Total
	Cm	Qty	Cm	Kg	Cm	Kg
BD001A01	207*100*135	9+1	101*193	-		
BD001A02	216*100*135	9+1	101*201	-		
BD001A03	207*100*135	5+1	101*193	-	-	-
BD001A04	216*100*135	5+1	101*201	-		
BD001A05	255*100*148	9+1	121*241	-		
BD001A06		9+1	121*121	-		
BD001A07		5+1	121*121	-		

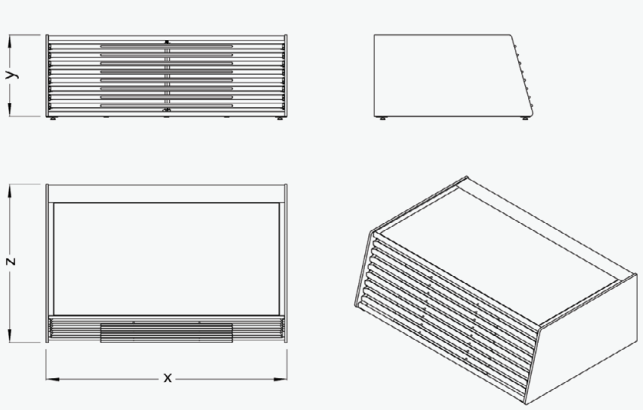

NEW
70 kg

BD001B

DRAWERS

Code	Stand Size	Panels	Panel Size	Max	Packing	Total
	Cm	Qty	Cm	Kg	Cm	Kg
BD001B01	207*100*135	9+1	101*193	-		
BD001B02	216*100*135	9+1	101*201	-		
BD001B03	207*100*135	5+1	101*193	-		
BD001B04	216*100*135	5+1	101*201	-		
BD001B05	255*100*148	9+1	121*241	-		
BD001B06	135*117*176	11+1	121*121	-		
BD001B07		9+1	121*121	-		
BD001B08		5+1	121*121	-		

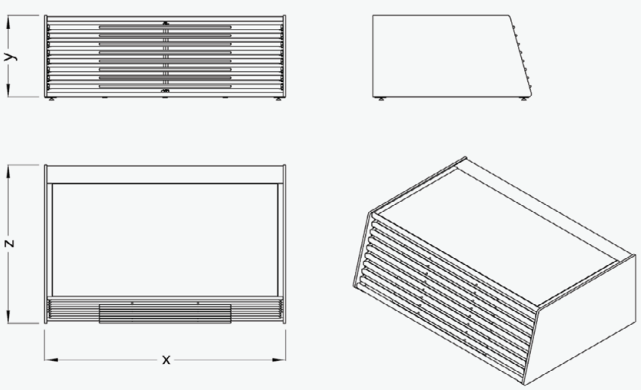

NEW
170 kg

BD001C

DRAWERS

Code	Stand Size	Panels	Panel Size	Max	Packing	Total
	Cm	Qty	Cm	Kg	Cm	Kg
BD001C01	209*100*135	9+1	101*193	-		
BD001C02	217*100*135	9+1	101*201	-		
BD001C03	209*100*135	5+1	101*193	-	-	-
BD001C04	217*100*135	5+1	101*201	-		
BD001C05	257*100*149	9+1	121*241	-	-	-
BD001C06		9+1	121*121	-		
BD001C07		5+1	121*121	-		

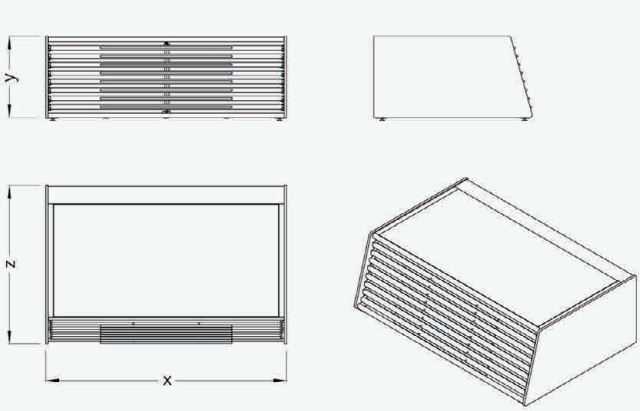

NEW 70 kg

BD001D

DRAWERS

Code	Stand Size	Panels	Panel Size	Max	Packing	Total
	Cm	Qty	Cm	Kg	Cm	Kg
BD001D01	209*100*135	9+1	101*193	-		
BD001D02	217*100*135	9+1	101*201	-		
BD001D03	209*100*135	5+1	101*193	-		-
BD001D04	217*100*135	5+1	101*201	-		-
BD001D05	257*100*149	9+1	121*241	-		
BD001D06		9+1	121*121	-		
BD001D07		5+1	121*121	-		

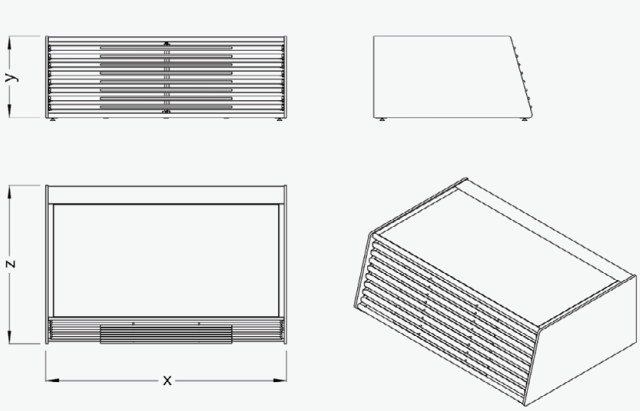

HORIZONTAL, PULL

NEW
170 kg

BD002A

DRAWERS

Code	Stand Size	Panels	Panel Size	Max	Packing	Total
	Cm	Qty	Cm	Kg	Cm	Kg
BD002A01	207*100*129	9+1	101*193	-		
BD002A02	217*100*129	9+1	101*201	-		
BD002A03	207*100*129	5+1	101*193	-	-	-
BD002A04	217*100*129	5+1	101*201	-	-	-
BD002A05	257*100*149	9+1	121*241	-	-	-
BD002A06		9+1	121*121	-		
BD002A07		5+1	121*121	-		

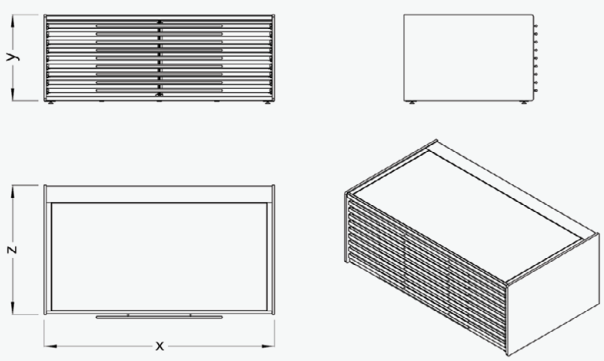

NEW 70 kg

BD002B

DRAWERS

Code	Stand Size	Panels	Panel Size	Max	Packing	Total
	Cm	Qty	Cm	Kg	Cm	Kg
BD002B01	207*100*129	9+1	101*193	-		
BD002B02	217*100*129	9+1	101*201	-		
BD002B03	207*100*129	5+1	101*193	-	-	-
BD002B04	217*100*129	5+1	101*201	-	-	-
BD002B05	257*100*149	9+1	121*241	-	-	-
BD002B06		9+1	121*121	-		
BD002B07		5+1	121*121	-		

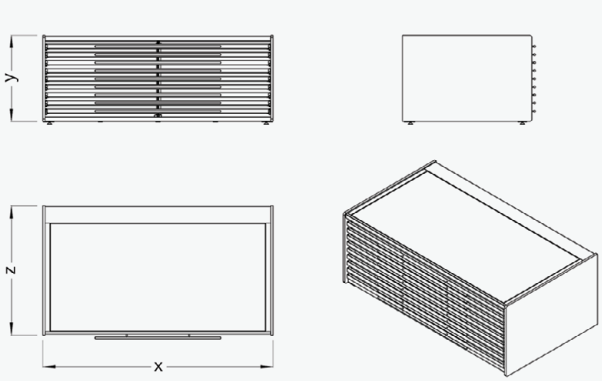

HORIZONTAL, PULL

NEW
170 kg

BD002C

DRAWERS

Code	Stand Size	Panels	Panel Size	Max	Packing	Total
	Cm	Qty	Cm	Kg	Cm	Kg
BD002C01	207*100*129	9+1	101*193	-		
BD002C02	217*100*129	9+1	101*201	-	-	
BD002C03	207*100*129	5+1	101*193	-	-	-
BD002C04	217*100*129	5+1	101*201	-	-	-
BD002C05	257*100*149	9+1	121*241	-	-	-
BD002C07		9+1	121*121	-		
BD002C08		5+1	121*121	-		

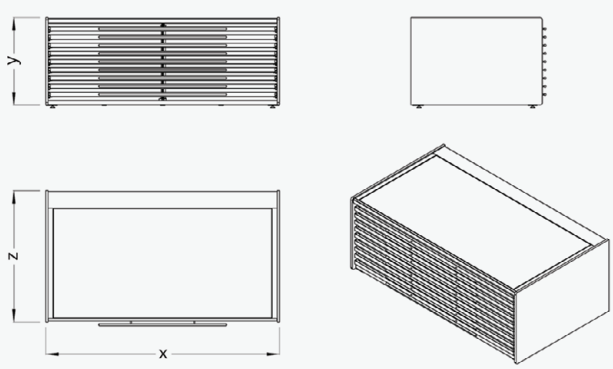

NEW
70 kg

BD002D

DRAWERS

Code	Stand Size	Panels	Panel Size	Max	Packing	Total
	Cm	Qty	Cm	Kg	Cm	Kg
BD002D01	207*100*129	9+1	101*193	-		
BD002D02	217*100*129	9+1	101*201	-		
BD002D03	207*100*129	5+1	101*193	-	-	-
BD002D04	217*100*129	5+1	101*201	-	-	-
BD002D05	257*100*149	9+1	121*241	-	-	-
BD002D06		9+1	121*121	-		
BD002D07		5+1	121*121	-		

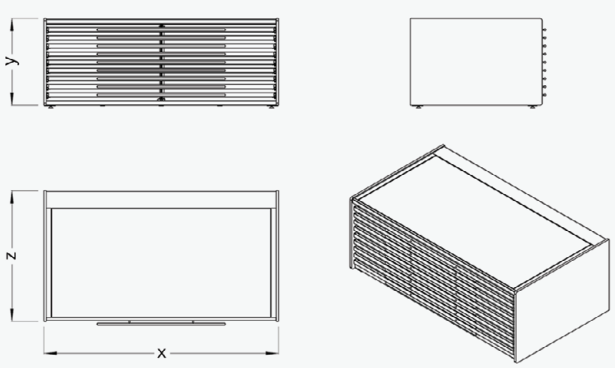

NEW
170 kg

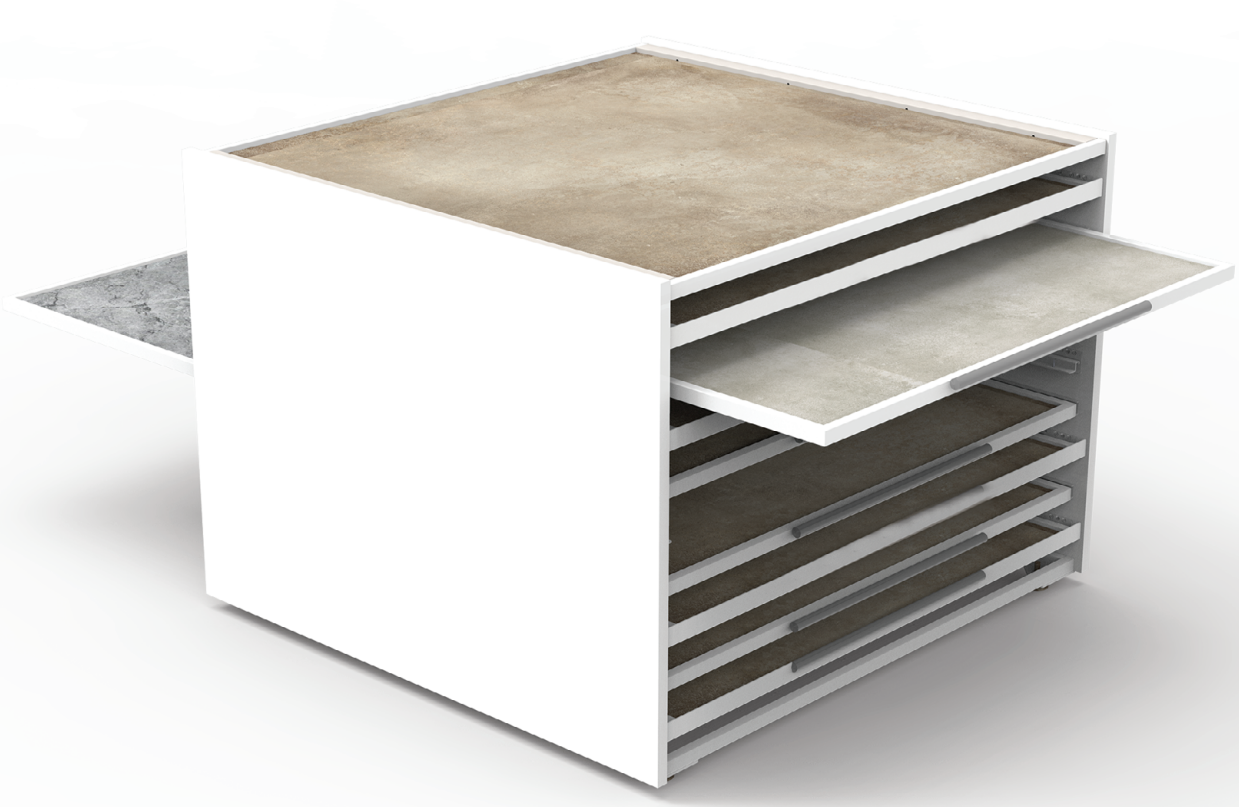

BD003A

DRAWERS

Code	Stand Size	Panels	Panel Size	Max	Packing	Total
	Cm	Qty	Cm	Kg	Cm	Kg
BD003A01	140*96*155	9+1	121*121			
BD003A02	140*96*155	9+1	60*121			
BD003A03	207*100*129	9+1	101*193			
BD003A04	217*100*129	9+1	101*201			
BD003A05		9+1	101*101			
BD003A06		9+1	81*81			

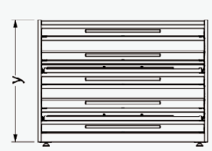

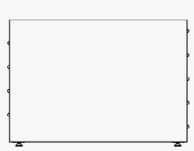

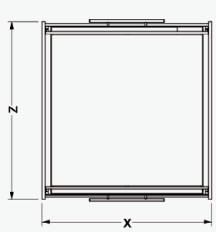

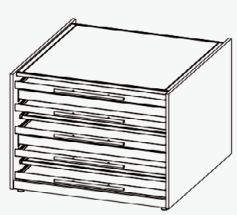

NEW
70 kg

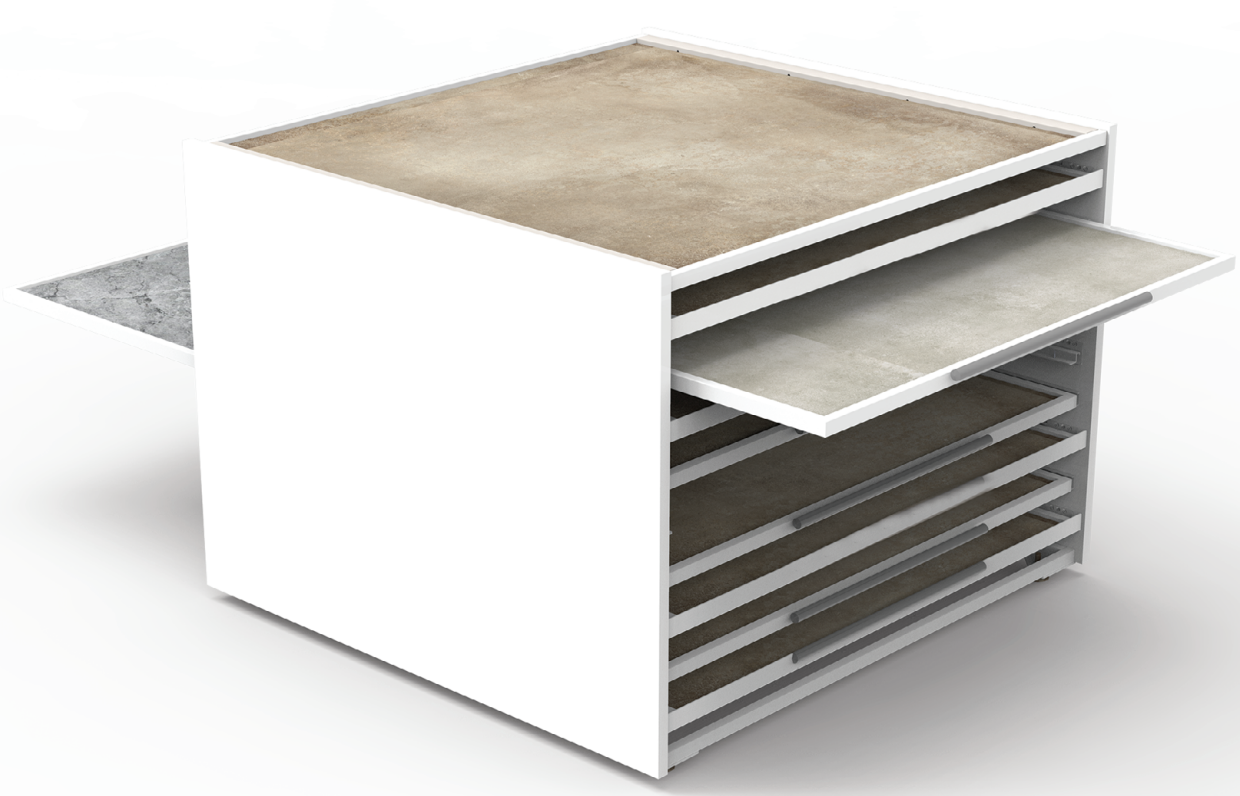

BD003B

DRAWERS

Code	Stand Size	Panels	Panel Size	Max	Packing	Total
	Cm	Qty	Cm	Kg	Cm	Kg
BD003B01	140*96*155	9+1	121*121	-		
BD003B02	140*96*155	9+1	60*121	-		
BD003B03	207*100*129	9+1	101*193	-	-	-
BD003B04	217*100*129	9+1	101*201			
BD003B05		9+1	101*101			
BD003B06		9+1	81*81			

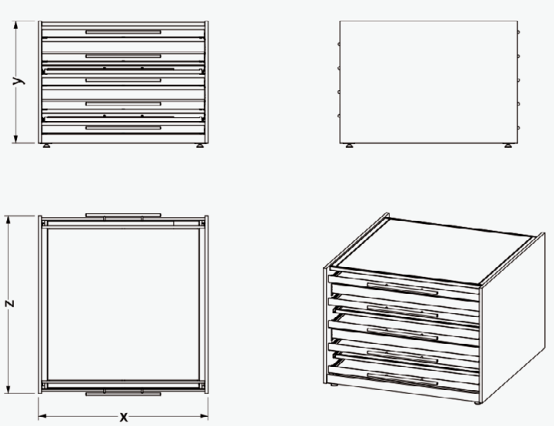

NEW
170 kg

BD003C

DRAWERS

Code	Stand Size	Panels	Panel Size	Max	Packing	Total
	Cm	Qty	Cm	Kg	Cm	Kg
BD003C01	140*96*155	9+1	121*121	-		
BD003C02	140*96*155	9+1	60*121	-		
BD003C03	207*100*129	9+1	101*193	-	-	-
BD003C04	217*100*129	9+1	101*201			
BD003C05		9+1	101*101			
BD003C06		9+1	81*81			

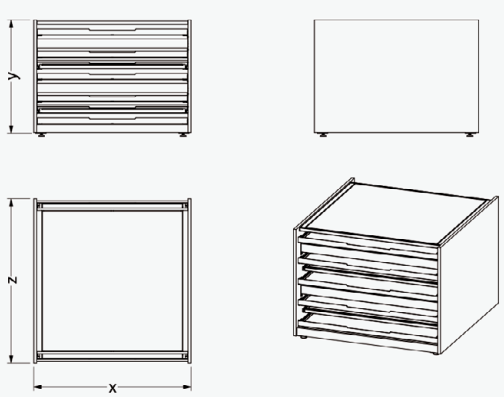

NEW
70 kg

BD003D

DRAWERS

Code	Stand Size	Panels	Panel Size	Max	Packing	Total
	Cm	Qty	Cm	Kg	Cm	Kg
BD003D01	140*96*155	9+1	121*121	-		
BD003D02	140*96*155	9+1	60*121	-		
BD003D03	207*100*129	9+1	101*193	-	-	-
BD003D04	217*100*129	9+1	101*201			
BD003D05		9+1	101*101			
BD003D06		9+1	81*81			

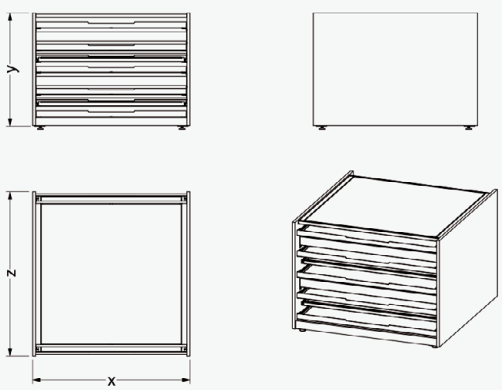

NEW
70 kg

BD005A

DRAWERS

Code	Stand Size	Panels	Panel Size	Max	Packing	Total
	Cm	Qty	Cm	Kg	Cm	Kg
BD005A01	134*126*100	14	61*121			
BD005A02		14	81*81	-	-	-
BD005A03		14	61*61	-	-	-
BD005A04		14	91*91	-	-	-
BD005A05		14	101*101	-	-	-
BD005A06		14	121*121	-	-	-

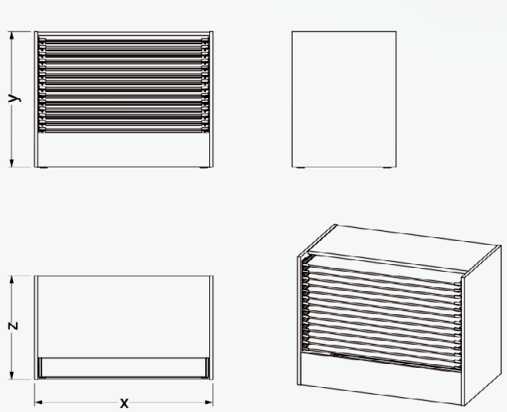

BD006A

DRAWERS

Code	Stand Size	Panels	Panel Size	Max	Packing	Total
	Cm	Qty	Cm	Kg	Cm	Kg
BD006A01	65*91*70	10	61*61	-	-	-
BD006A02	125*91*70	10	61*121	-	-	-
BD006A03	85*91*90	10	81*81	-	-	-
BD006A04	95*91*100	10	91*91	-	-	-
BD006A05	105*91*110	10	101*101	-	-	-
BD006A06	125*91*130	10	121*121	-	-	-

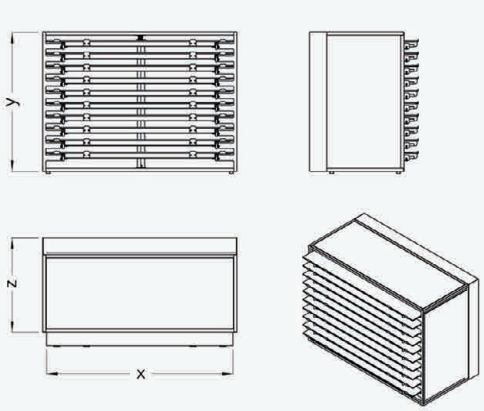

BD007A

DRAWERS

Code	Stand Size	Panels	Panel Size	Max	Packing	Total
	Cm	Qty	Cm	Kg	Cm	Kg
BD007A01	65*91*70	10	61*61	-	79*107*90	-
BD007A02	125*91*70	10	61*121	-	94*107*131	-
BD007A03	85*91*90	10	81*81	-	95*107*105	-
BD007A04	95*91*100	10	91*91	-	102*107*109	-
BD007A05	105*91*110	10	101*101	-	111*107*116	-
BD007A06	125*91*130	10	121*121	-	134*107*134	-

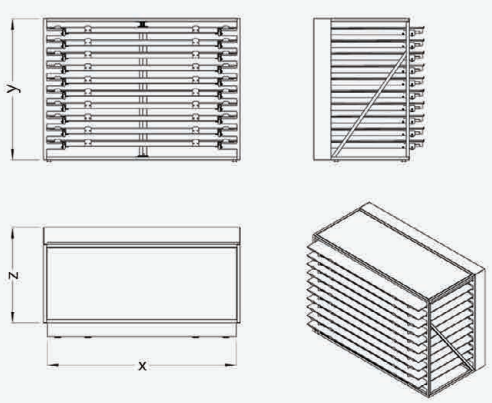

STANDS

STANDS

BR

STANDS
95
119

BR SERIES

STAND D

VERTICAL BOOK

Led Light
Panel
LOGO
Logo Panel
Digital Print
Panel

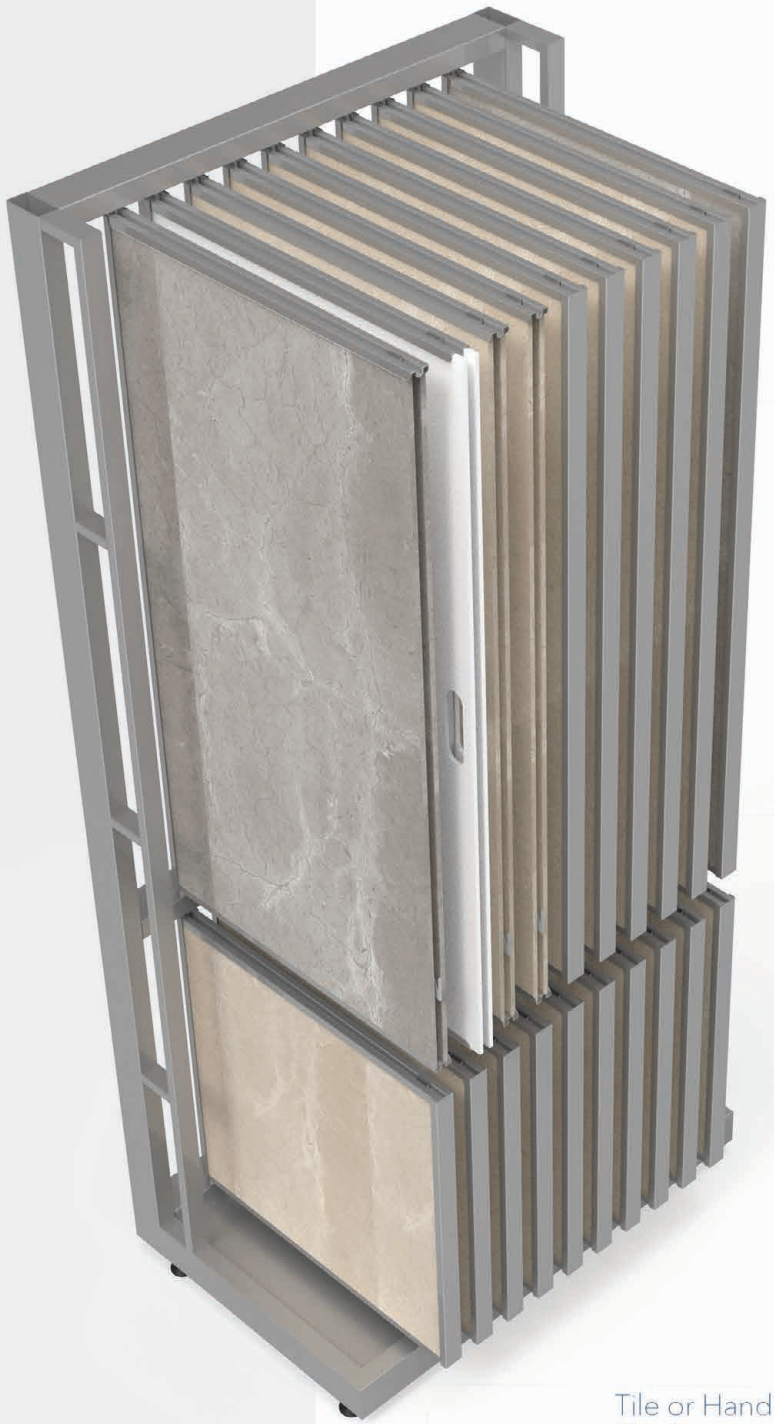

Cover
or
Without Cover

Tiles
or
Hand Panels

1,2,3,4 Flat

Tile or Hand Panel
Thickness

Pieces of Leaf

BR023A

STANDS

Code	Stand Size	Panels	Panel Size	Max	Packing	Total
	Cm	Qty	Cm	Kg	Cm	Kg
BR023A01	100*220*65	40	66*66	-	-	-

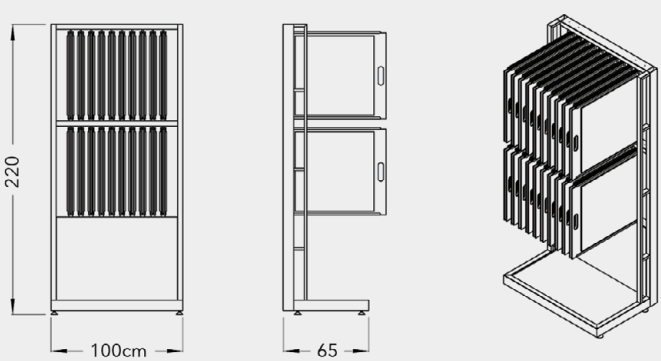

BR023B

STANDS

Code	Stand Size	Panels	Panel Size	Max	Packing	Total
	Cm	Qty	Cm	Kg	Cm	Kg
BR023B01	100*220*65	20	66*132	-	-	-

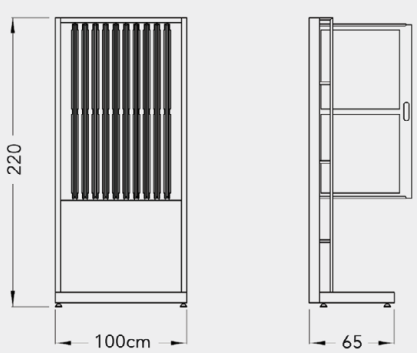

133

BR023C

STANDS

Code	Stand Size	Panels	Panel Size	Max	Packing	Total
	Cm	Qty	Cm	Kg	Cm	Kg
BR023C01	100*224*65	20	66*66	-	-	-
		20	66*132	-	-	-

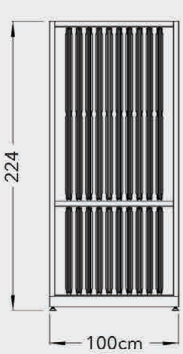

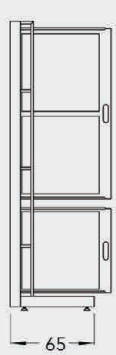

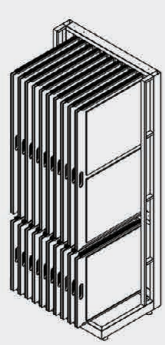

BR023D

STANDS

Code	Stand Size	Panels	Panel Size	Max	Packing	Total
	Cm	Qty	Cm	Kg	Cm	Kg
BR023D01	100*224*65	20	66*66	-	-	-
		20	66*132			

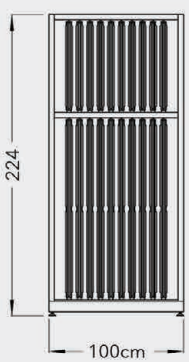

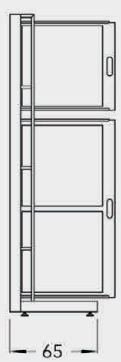

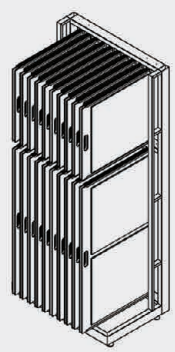

BR023E

STANDS

Code	Stand Size	Panels	Panel Size	Max	Packing	Total
	Cm	Qty	Cm	Kg	Cm	Kg
BR023E01	100*230*65	60	66*66	-	-	-

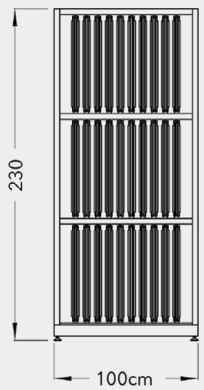

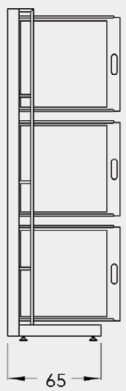

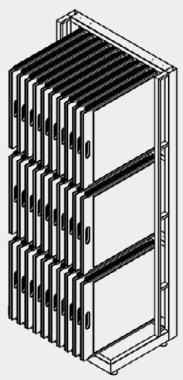

BR023G

STANDS

Code	Stand Size	Panels	Panel Size	Max	Packing	Total
	Cm	Qty	Cm	Kg	Cm	Kg
BR023G01	100*220*65	60	variable	-	-	-

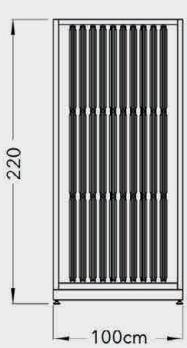

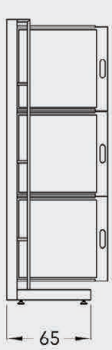

BR023H

STANDS

Code	Stand Size	Panels	Panel Size	Max	Packing	Total
	Cm	Qty	Cm	Kg	Cm	Kg
BR023H01	100*220*65	40	66*66	-	-	-

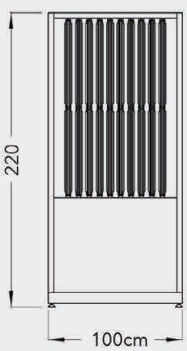

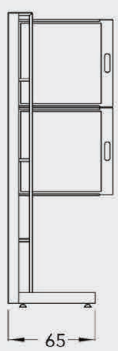

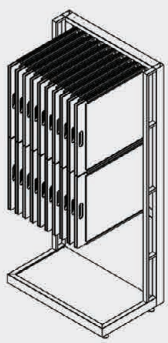

BR024A

STANDS

Code	Stand Size	Panels	Panel Size	Max	Packing	Total
	Cm	Qty	Cm	Kg	Cm	Kg
BR024A01	100*220*65	40	66*66	-	-	-

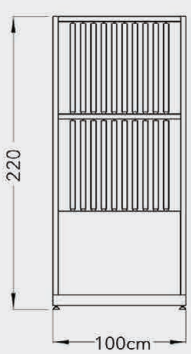

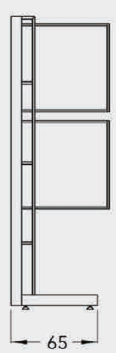

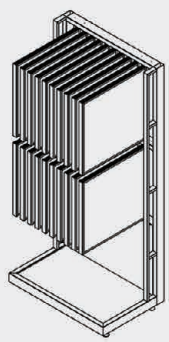

BR024B

STANDS

Code	Stand Size	Panels	Panel Size	Max	Packing	Total
	Cm	Qty	Cm	Kg	Cm	Kg
BR024B01	100*220*65	20	66*132	-	-	-

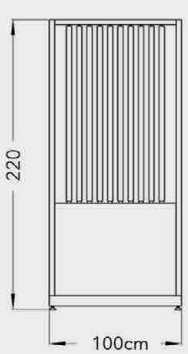

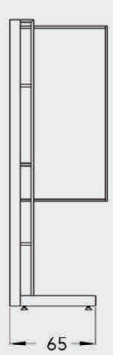

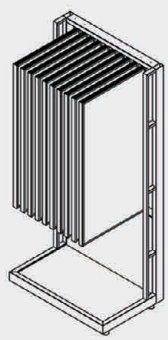

BR024C

STANDS

Code	Stand Size	Panels	Panel Size	Max	Packing	Total
	Cm	Qty	Cm	Kg	Cm	Kg
BR024C01	100*224*65	20	66*66	-	-	-
		20	66*132	-	-	-

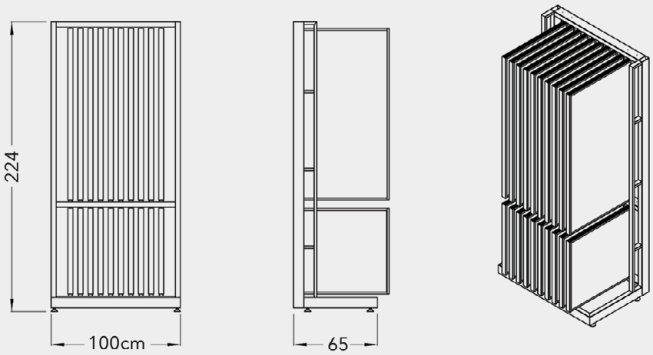

BR024D

STANDS

Code	Stand Size	Panels	Panel Size	Max	Packing	Total
	Cm	Qty	Cm	Kg	Cm	Kg
BR024D01	100*224*65	20 20	66*66 66*132	-	-	-

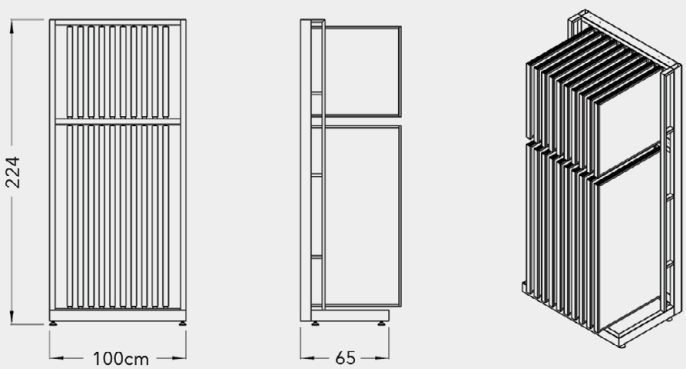

BR024E

STANDS

Code	Stand Size	Panels	Panel Size	Max	Packing	Total
	Cm	Qty	Cm	Kg	Cm	Kg
BR024E01	100*230*65	60	66*66	-	-	-

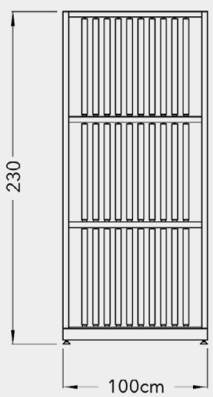

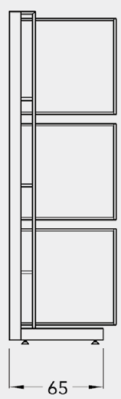

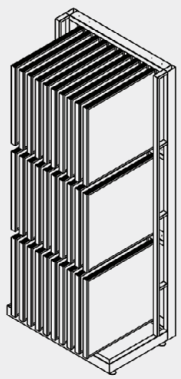

BR024G

STANDS

Code	Stand Size	Panels	Panel Size	Max	Packing	Total
	Cm	Qty	Cm	Kg	Cm	Kg
BR024G01	100*220*65	60	variable	-	-	-

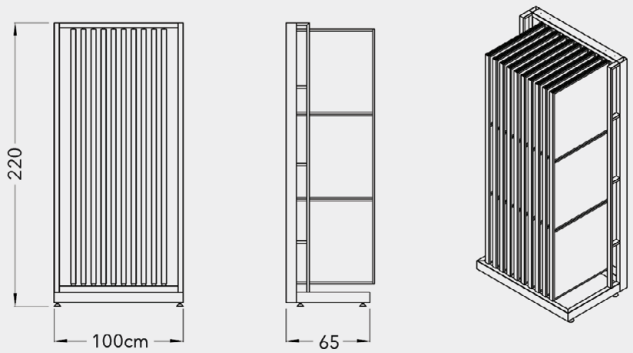

BR024H

STANDS

Code	Stand Size	Panels	Panel Size	Max	Packing	Total
	Cm	Qty	Cm	Kg	Cm	Kg
BR024H01	100*220*65	40	66*66	-	-	-

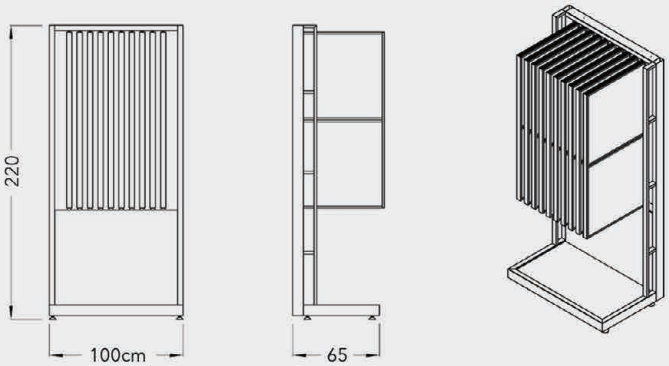

BR024P

STANDS

Code	Stand Size	Panels	Panel Size	Max	Packing	Total
	Cm	Qty	Cm	Kg	Cm	Kg
BR024P01	88*220*72	29	20*20	-	76*184*94	-

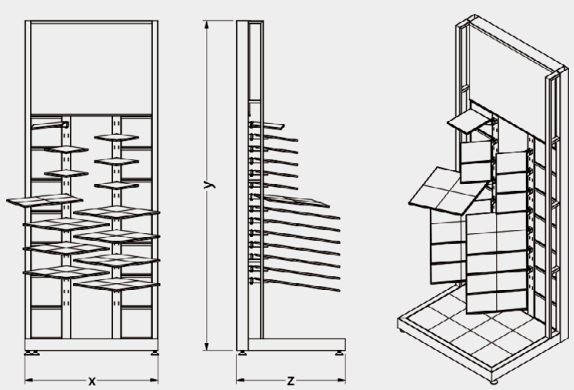

BR025A

STANDS

Code	Stand Size	Panels	Panel Size	Max	Packing	Total
	Cm	Qty	Cm	Kg	Cm	Kg
BR025A01	170*193*70	10*2	68*138	-	83*87*249	-
BR025A02	170*221*70	10*2	68*165	-	83*83*243	-
BR025A03	170*238*70	10*2	68*180	-	83*83*258	-

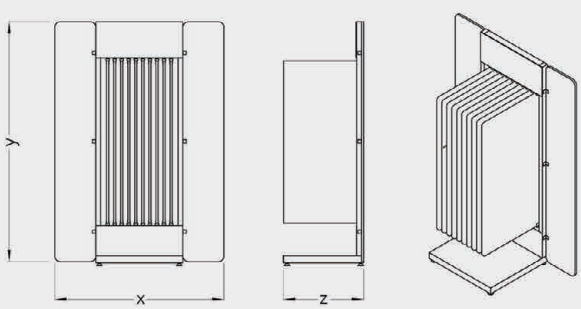

BR026H

STANDS

Code	Stand Size	Panels	Panel Size	Max	Packing	Total
	Cm	Qty	Cm	Kg	Cm	Kg
BR026H01	145*198*70	10*2	65*69	-	-	-

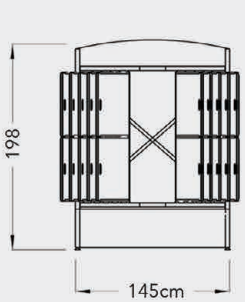

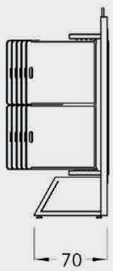

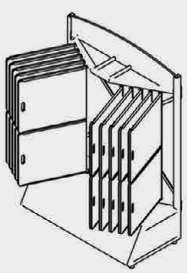

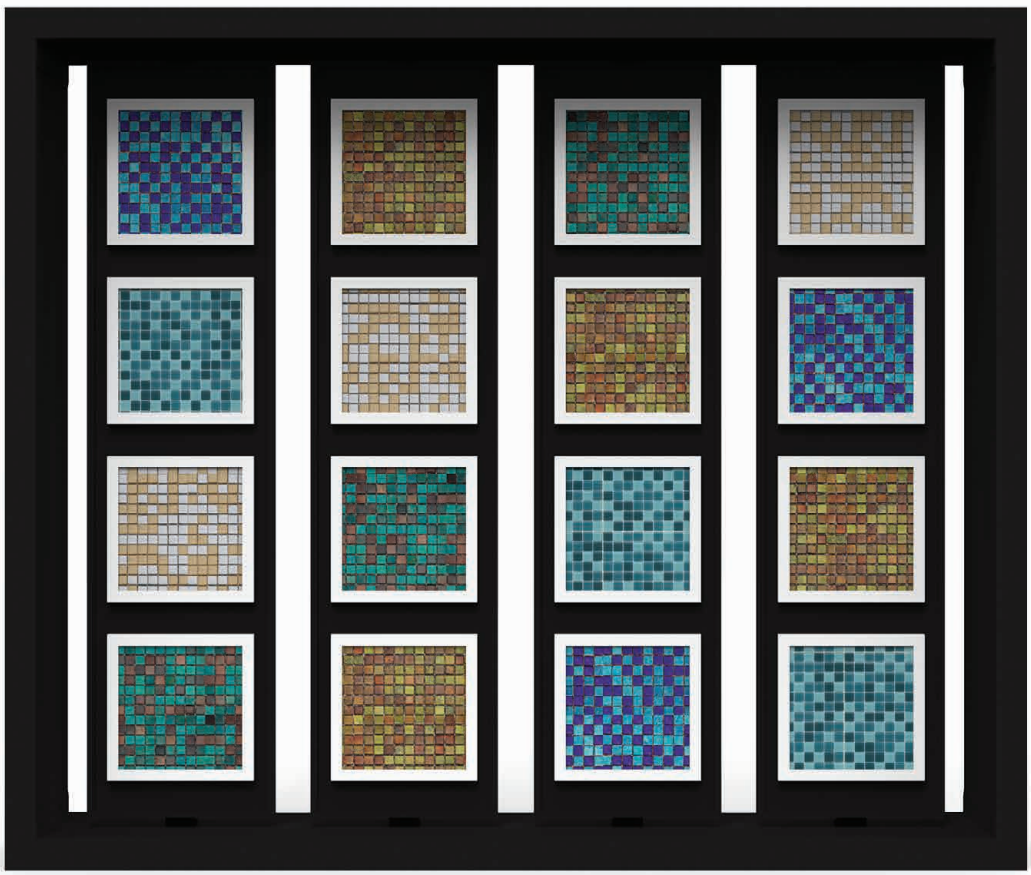

BR027X

STANDS

Code	Stand Size	Panels	Panel Size	Max	Packing	Total
	Cm	Qty	Cm	Kg	Cm	Kg
BR027X01	264*224*46	32	33*33	-	-	-

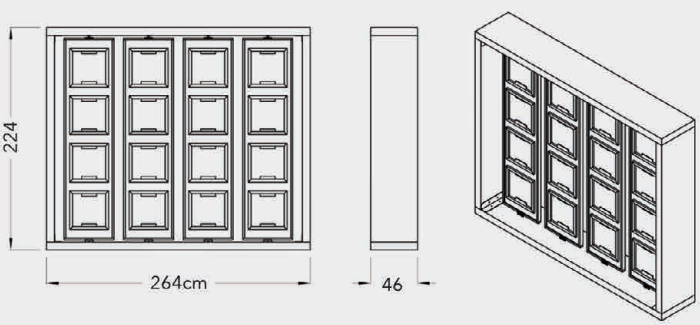

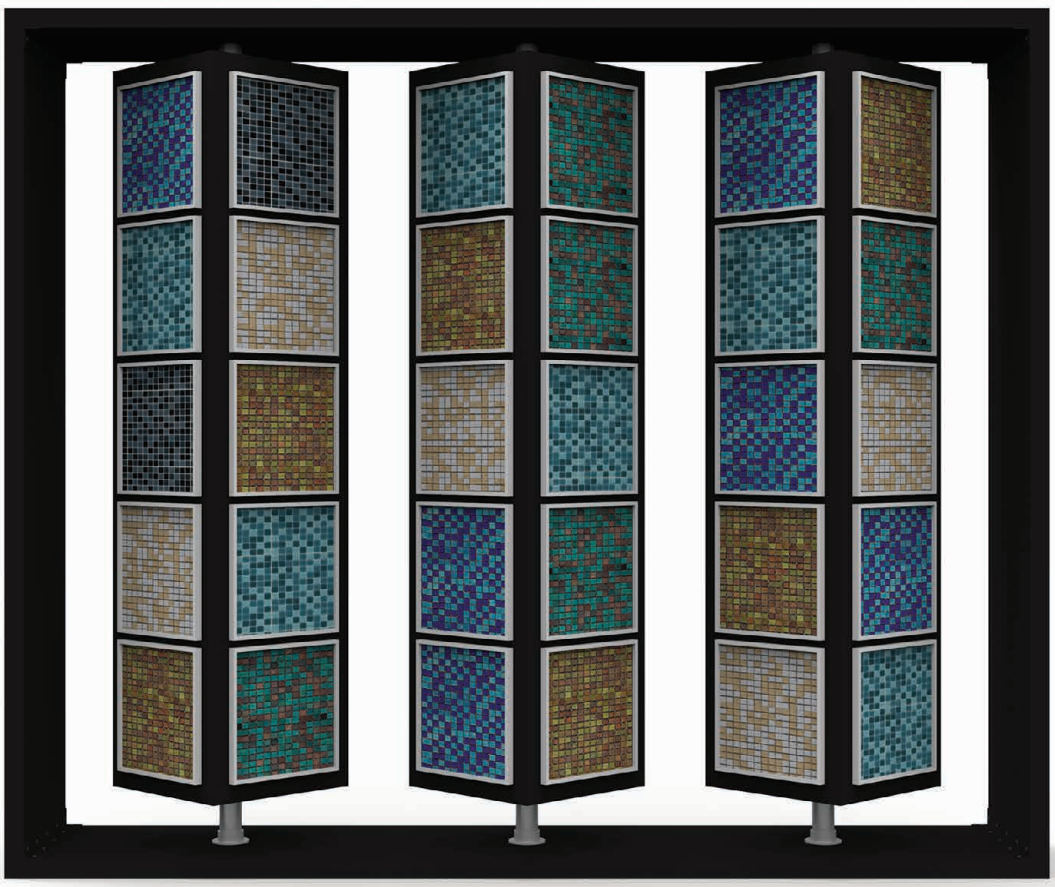

BR027Y

STANDS

Code	Stand Size	Panels	Panel Size	Max	Packing	Total
	Cm	Qty	Cm	Kg	Cm	Kg
BR027Y01	264*244*49	48	33*33	-	-	-

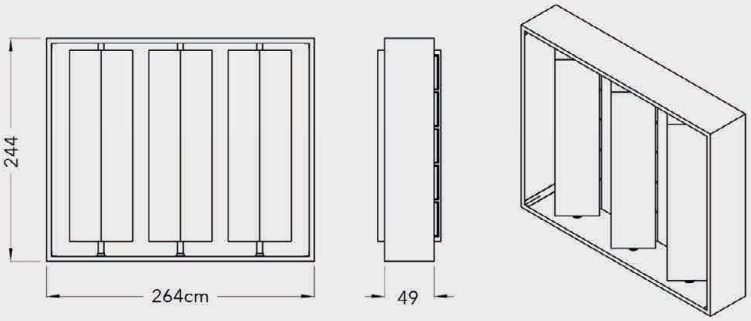

BR028A

STANDS

Code	Stand Size	Panels	Panel Size	Max	Packing	Total
	Cm	Qty	Cm	Kg	Cm	Kg
BR028A01	129*231*129	36	33*33	-	-	-

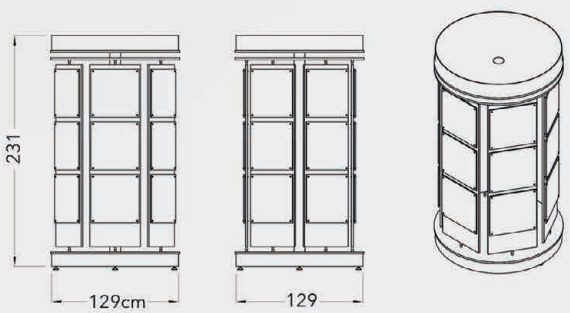

BR028C

STANDS

Code	Stand Size	Panels	Panel Size	Max	Packing	Total
	Cm	Qty	Cm	Kg	Cm	Kg
BR028C01	129*224*129	18	33*33	-	-	-

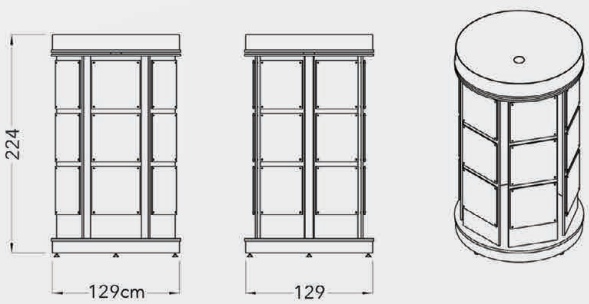

BR028D

STANDS

Code	Stand Size	Panels	Panel Size	Max	Packing	Total
	Cm	Qty	Cm	Kg	Cm	Kg
BR028D01	101*202*100	48	64*47	-	-	-

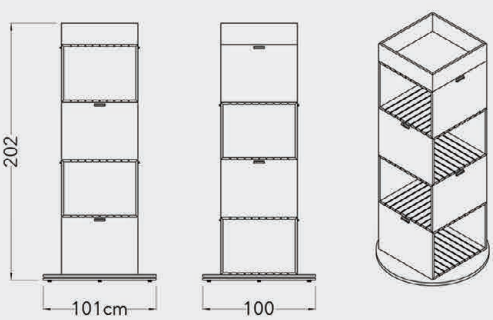

NEW

BR029C

STANDS

Code	Stand Size	Panels	Panel Size	Max	Packing	Total
	Cm	Qty	Cm	Kg	Cm	Kg
BR029C01	95*235*95	8*3	65*69	-		

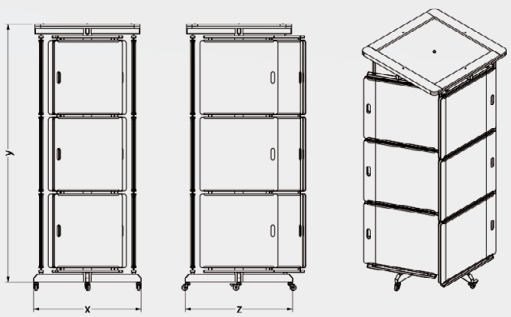

BR023O

LOGO PANEL

Code	Stand Size	Panels	Panel Size	Max	Packing	Total
	Cm	Qty	Cm	Kg	Cm	Kg
BR023O01						

BR025O

DIGITAL PRINT PANEL

Code	Stand Size	Panels	Panel Size	Max	Packing	Total
	Cm	Qty	Cm	Kg	Cm	Kg
BR025O01						

BR023O50

LED LİGHT PANEL

Code	Stand Size	Panels	Panel Size	Max	Packing	Total
	Cm	Qty	Cm	Kg	Cm	Kg
BR023O50						

STANDS

BL

BL SERIES

STANDS
121
128

STANDS

MODULAR VERTICAL SLIDING

BL SERIES

Top Side panel
Stone extender
expandable up to
30-60 cm
60-100 cm
110-150 cm
Compressible
stone holder
6-11 mm
11-20 mm
Left-Right Side panel

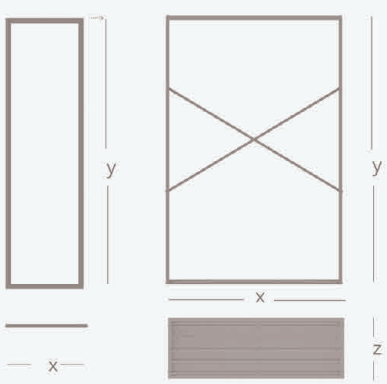

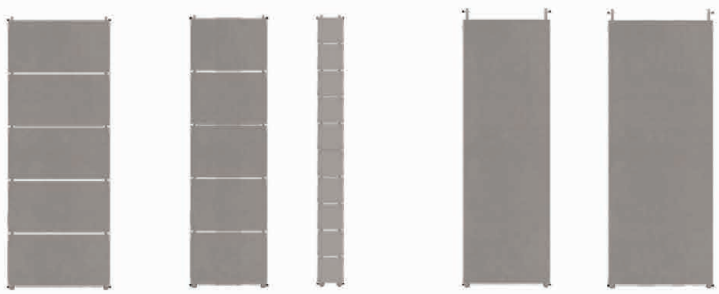

110	60	30	60	110
120	70	40	70	120
130	80	45	80	130
140	90	50	90	140
150	100		100	150

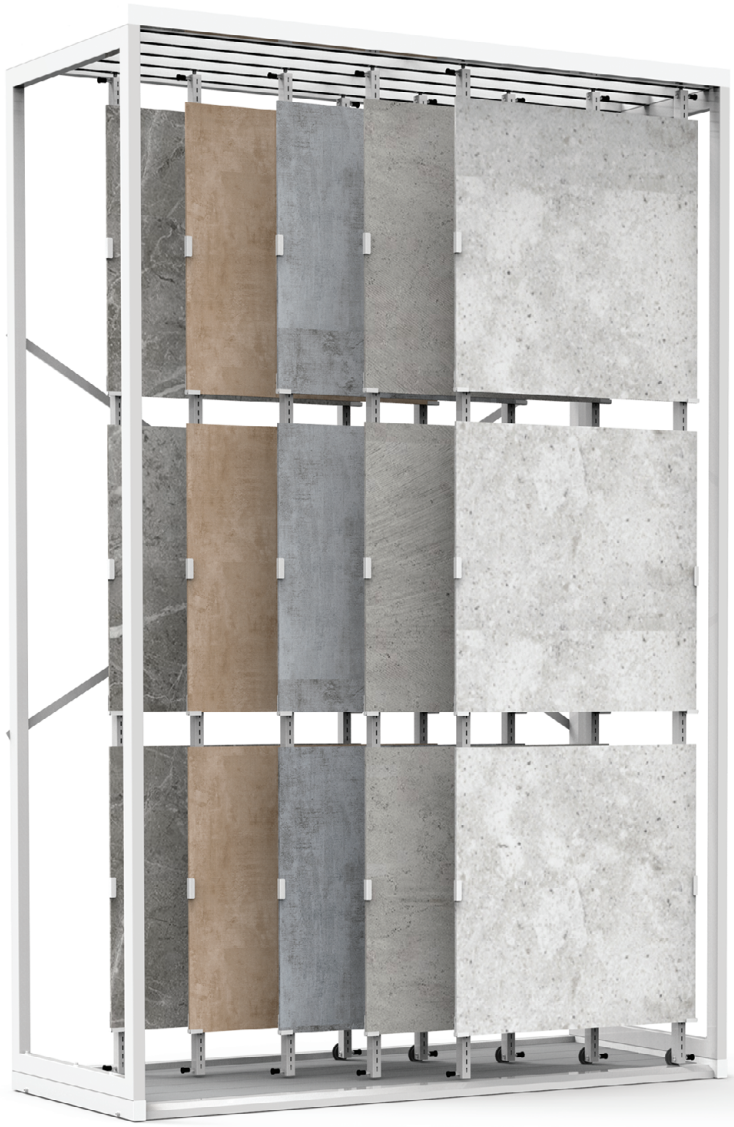

BL012A

STANDS

Code	Stand Size	Panels	Panel Size	Max	Packing	Total
	Cm	Qty	Cm	Kg	Cm	Kg
BL012A01	212*325*90	5	90*90	-	-	-
BL0012A02	212*310*90	7		-	-	-
BL0012A03	270*275*100	9		-	-	-
BL0012A04	270*260*100	9		-	-	-
BL0012A05	270*275*90	5		-	-	-
BL0012A06	270*215*100	9		-	-	-
BL0012A07	270*255*105	9		-	-	-
BL0012A08	270*235*100	9		-	-	-
BL0012A09	235*288*100	9		-	-	-
BL0012A10	255*288*100	9		-	-	-

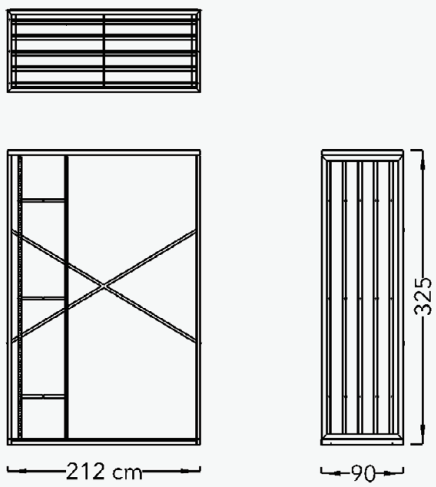

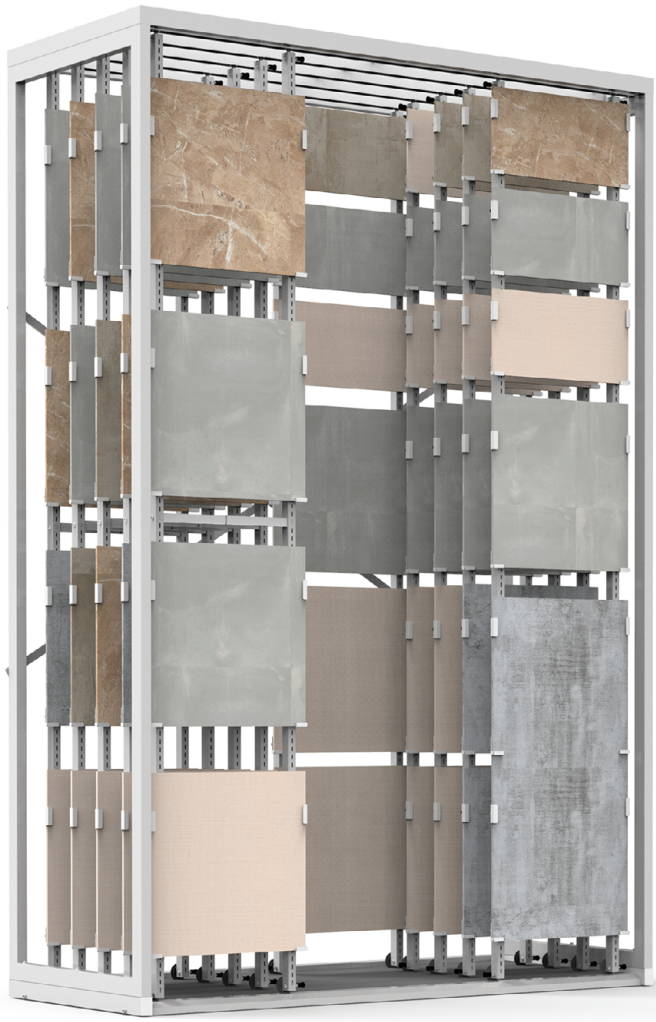

BL013A

STANDS

Code	Stand Size	Panels	Panel Size	Max	Packing	Total
	Cm	Qty	Cm	Kg	Cm	Kg
BL013A01	212*325*90	5*2	60*30	-	-	-
BL013A02	308*325*90	7*2	60*60			
BL013A03	308*330*90	7*3		-	-	-
BL013A04	265*315*90	7*2		-	-	-
BL013A05	240*235*90	7*2		-	-	-
BL013A06	215*275*90	7*2		-	-	-

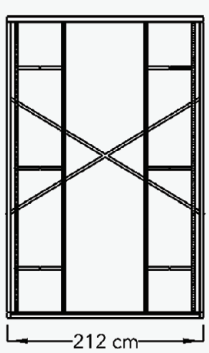

VERTICAL

BL014A

STANDS

Code	Stand Size	Panels	Panel Size	Max	Packing	Total
	Cm	Qty	Cm	Kg	Cm	Kg
BL014A01	424*325*90	5*2	60*60	-	-	-
BL014A02	424*325*90	6*2	60*120			
BL014A03	365*315*90	7*3		-	-	-
BL014A04	424*325*90	7*2		-	-	-
BL014A05	500*255*105	9*2		-	-	-
BL014A06	320*210*90	7*2		-	-	-
BL014A07	540*275*90	7*2		-	-	-
BL014A08	400*240*90	7*4		-	-	-
BL014A09	570*315*105	9*3		-	-	-
BL014A10	397*275*105	9*2		-	-	-

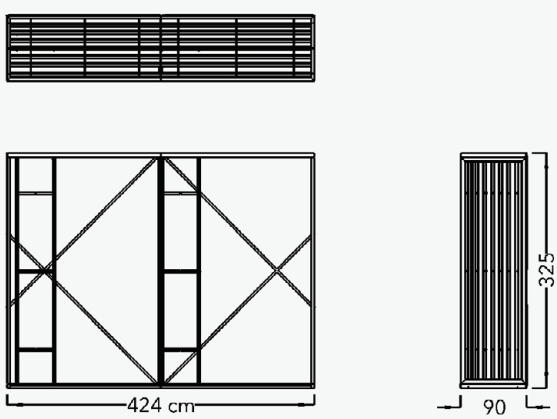

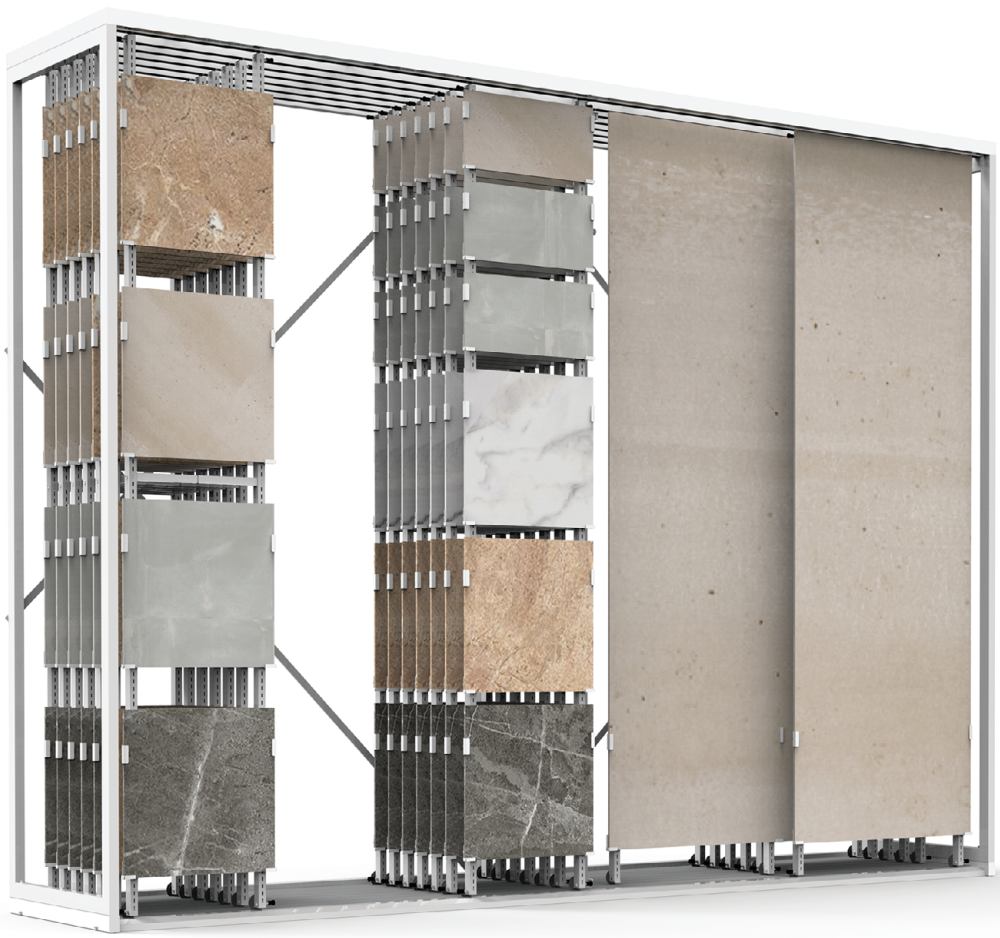

BL015A

STANDS

Code	Stand Size	Panels	Panel Size	Max	Packing	Total
	Cm	Qty	Cm	Kg	Cm	Kg
BL015A01	424*325*90	7*3	60*30	-	-	-
BL015A02	420*290*90	7*4	60*60			
BL015A03	424*260*90	7*3				
BL015A04	600*260*90	7*4		-	-	-
BL015A05	600*260*90	20		-	-	-
BL015A06	540*295*90	7*5		-	-	-
BL015A07	400*280*90	7*4		-	-	-
BL015A08	603*300*90	20		-	-	-
BL015A09	424*265*90	7*3		-	-	-

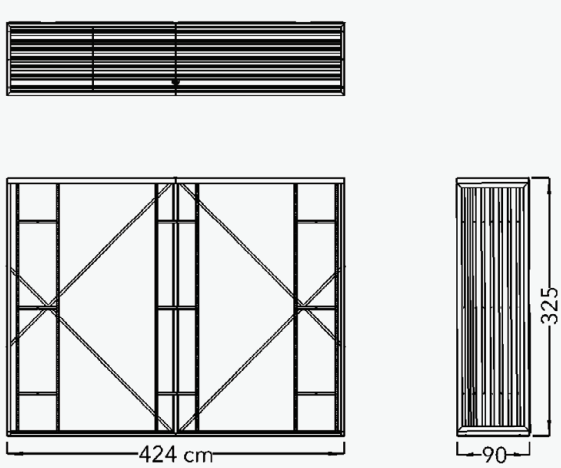

VERTICAL

BL017A

STANDS

Code	Stand Size	Panels	Panel Size	Max	Packing	Total
	Cm	Qty	Cm	Kg	Cm	Kg
BL017A01	636*325*90	7*4	60*30	-	-	-
BL017A02			60*60			
BL017A03	797*325*90	7*3	100*300			
BL017A04	710*295*105	9*3				

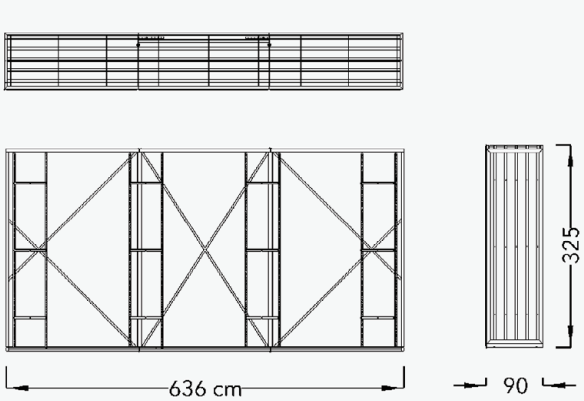

BL019A

STANDS

Code	Stand Size	Panels	Panel Size	Max	Packing	Total
	Cm	Qty	Cm	Kg	Cm	Kg
BL019A01	636*325*90	7*5	60*60	-	-	-
BL019A02	710*265*90	7*5	60*120			
BL019A03	615*275*90	7*5		-	-	-

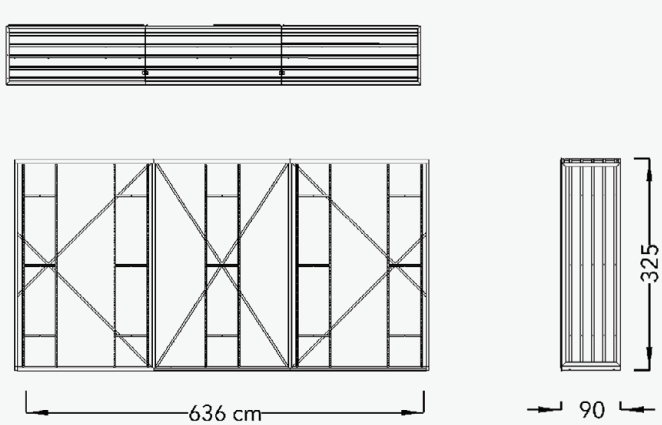

VERTICAL

BL202M 6-11 mm CERAMIC

TILE HOLDER-METAL

Code	Stand Size	Panels	Panel Size	Max	Packing	Total
	Cm	Qty	Cm	Kg	Cm	Kg
BL202M01		4		-	10*1*21	-

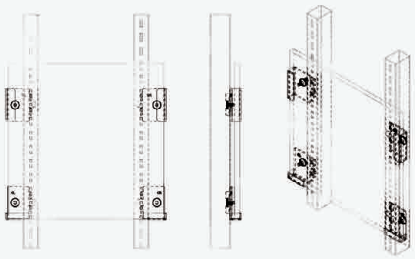

BL202M 11-20 mm CERAMIC

TILE HOLDER-METAL

Code	Stand Size	Panels	Panel Size	Max	Packing	Total
	Cm	Qty	Cm	Kg	Cm	Kg
BL202M02		4		-	10*1*21	-

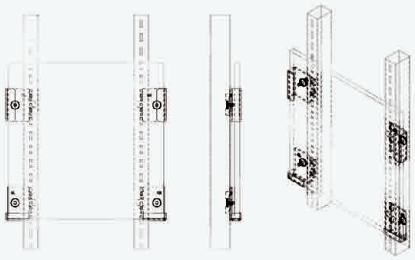

BL204M 6-11 mm CERAMIC

TILE HOLDER-ALUMINUM

Code	Stand Size	Panels	Panel Size	Max	Packing	Total
	Cm	Qty	Cm	Kg	Cm	Kg
BL204M01		4		-	10*1*21	-

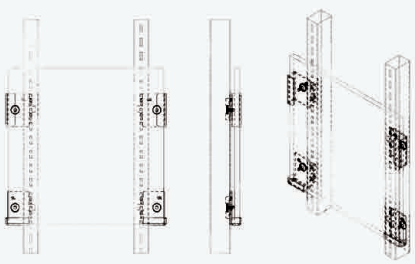

BL206M

6-11 mm CERAMIC

TILE HOLDER-METAL

Code	Stand Size	Panels	Panel Size	Max	Packing	Total
	Cm	Qty	Cm	Kg	Cm	Kg
BL206M01						

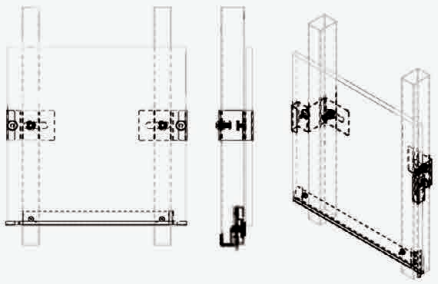

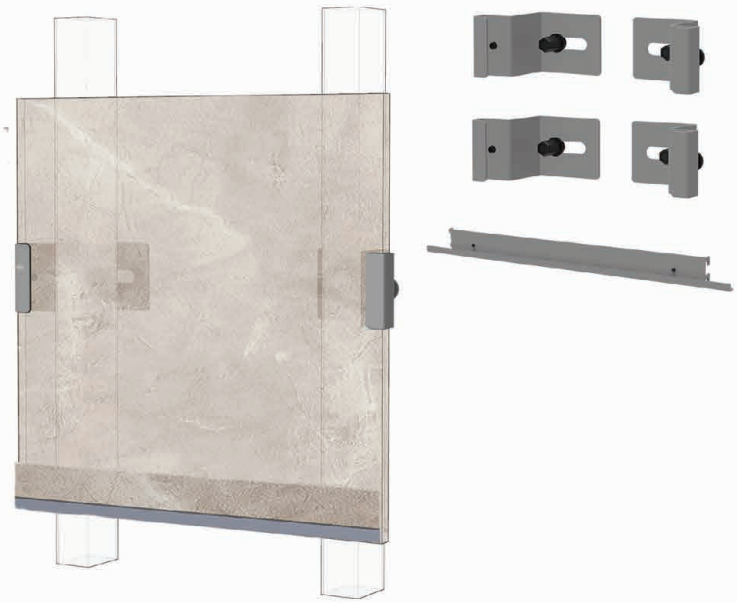

BL206M

11-20 mm CERAMIC

TILE HOLDER-METAL

Code	Stand Size	Panels	Panel Size	Max	Packing	Total
	Cm	Qty	Cm	Kg	Cm	Kg
BL206M02						

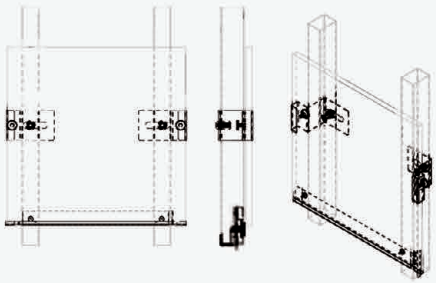

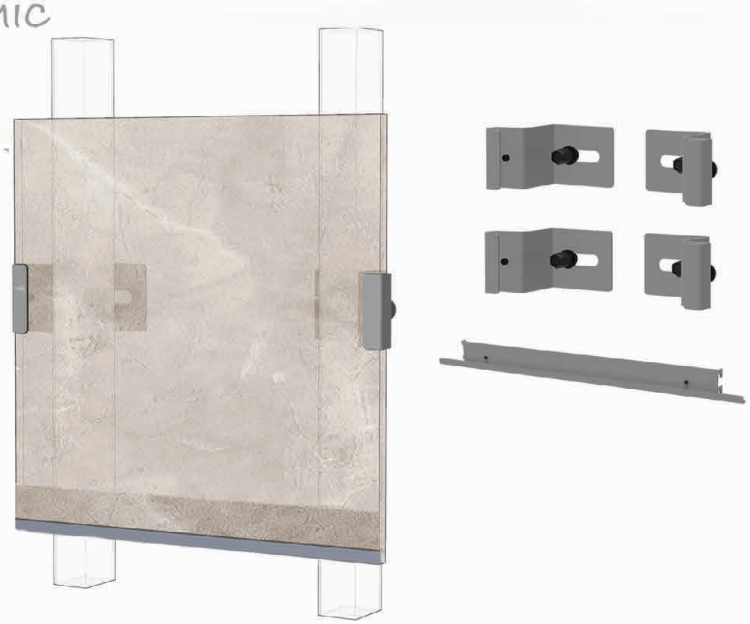

Code	Stand Size	Panels	Panel Size	Max	Packing	Total
	Cm	Qty	Cm	Kg	Cm	Kg

BL222G

18-25 mm

LEFT SIDE PANEL LAM

Code	Stand Size	Panels	Panel Size	Max	Packing	Total
	Cm	Qty	Cm	Kg	Cm	Kg
BL222G00				-	-	

BL224G

18-25 mm

RIGHT SIDE PANEL LAM

Code	Stand Size	Panels	Panel Size	Max	Packing	Total
	Cm	Qty	Cm	Kg	Cm	Kg
BL224G00						

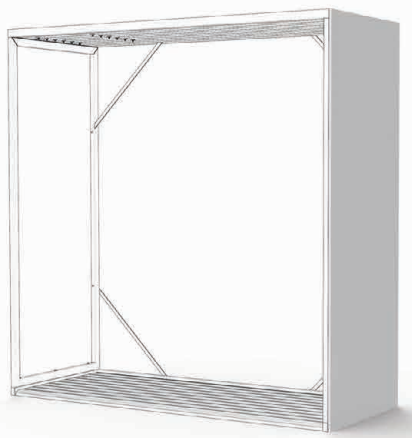

BL226G

8-18-25 mm

BACK SIDE PANEL LAM

Code	Stand Size	Panels	Panel Size	Max	Packing	Total
	Cm	Qty	Cm	Kg	Cm	Kg
BL226G00						

BL228G

8-18 mm

TOP SIDE PANEL LAM

Code	Stand Size	Panels	Panel Size	Max	Packing	Total
	Cm	Qty	Cm	Kg	Cm	Kg
BL228G00						

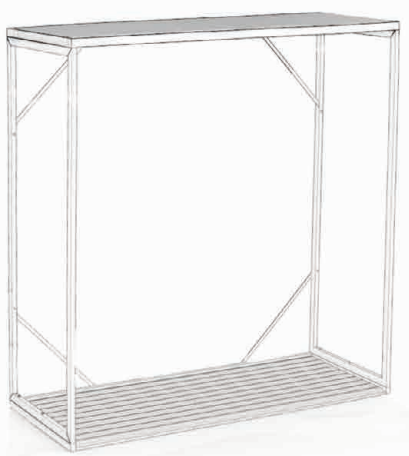

BL230G

LOGO PANEL LAM

Code	Stand Size	Panels	Panel Size	Max	Packing	Total
	Cm	Qty	Cm	Kg	Cm	Kg
BL230G01				-	-	

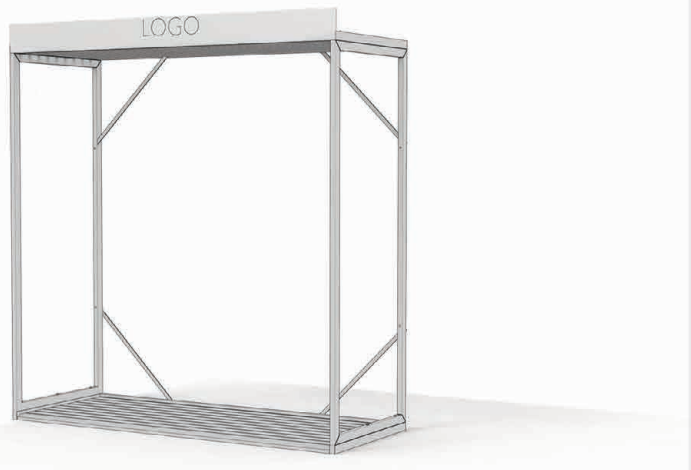

BL232G

LED LIGHT PANEL LAM

Code	Stand Size	Panels	Panel Size	Max	Packing	Total
	Cm	Qty	Cm	Kg	Cm	Kg
BL232G01						

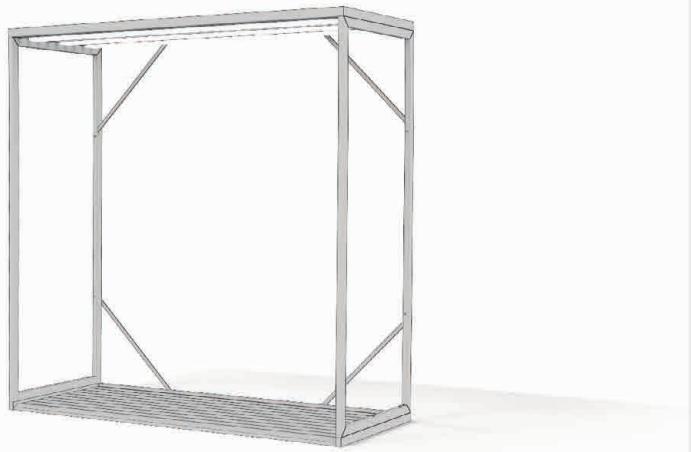

BL222I

18-25 mm

LEFT SIDE PANEL LACQUER

Code	Stand Size	Panels	Panel Size	Max	Packing	Total
	Cm	Qty	Cm	Kg	Cm	Kg
BL222I00			-		-	

BL224I

18-25 mm

RIGHT SIDE PANEL LACQUER

Code	Stand Size	Panels	Panel Size	Max	Packing	Total
	Cm	Qty	Cm	Kg	Cm	Kg
BL224I00						

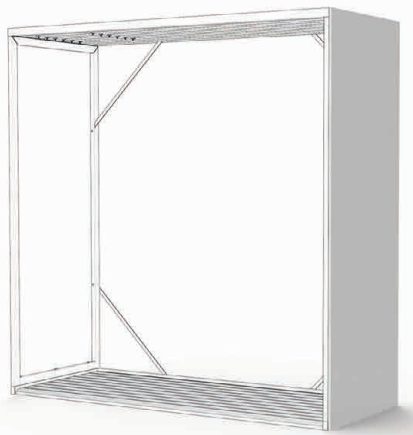

BL226I

8-18-25 mm

BACK SIDE PANEL LACQUER

Code	Stand Size	Panels	Panel Size	Max	Packing	Total
	Cm	Qty	Cm	Kg	Cm	Kg
BL226I00						

BL228I

8-18 mm

TOP SIDE PANEL LACQUER

Code	Stand Size	Panels	Panel Size	Max	Packing	Total
	Cm	Qty	Cm	Kg	Cm	Kg
BL228I00						

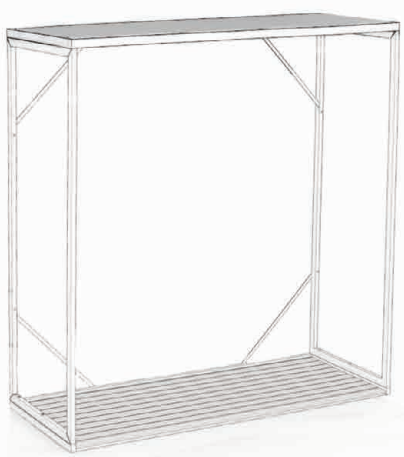

BL230I

LOGO PANEL LACQUER

Code	Stand Size	Panels	Panel Size	Max	Packing	Total
	Cm	Qty	Cm	Kg	Cm	Kg
BL230I01			-		-	

BL232I

LED LİGHT PANEL LACQUER

Code	Stand Size	Panels	Panel Size	Max	Packing	Total
	Cm	Qty	Cm	Kg	Cm	Kg
BL232I01						

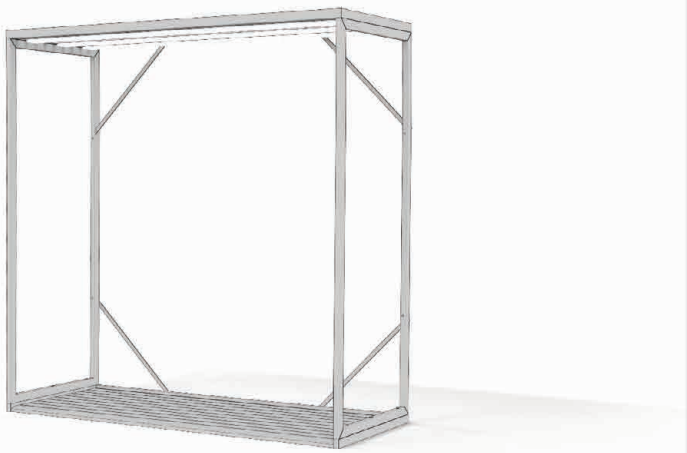

BL230M

LOGO PANEL METAL

Code	Stand Size	Panels	Panel Size	Max	Packing	Total
	Cm	Qty	Cm	Kg	Cm	Kg
BL230M01				-	-	

BL232M

LED LİGHT PANEL METAL

Code	Stand Size	Panels	Panel Size	Max	Packing	Total
	Cm	Qty	Cm	Kg	Cm	Kg
BL232M01						

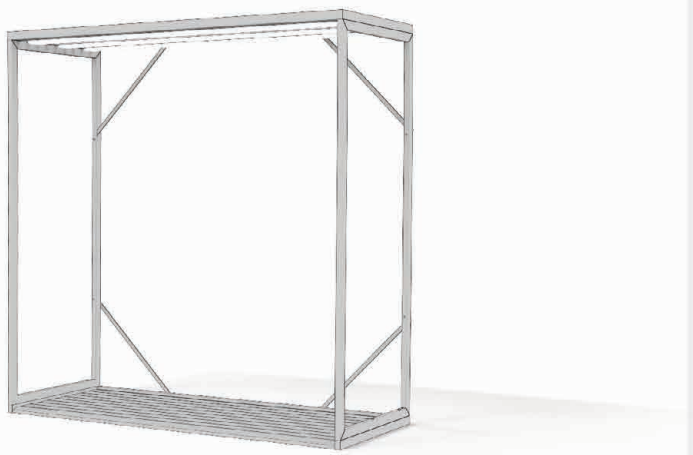

STANDS

BX

STANDS
131
176

BX A, B, C, F, Series
BX M, N, P, R Series

BX SERIES

STANDS

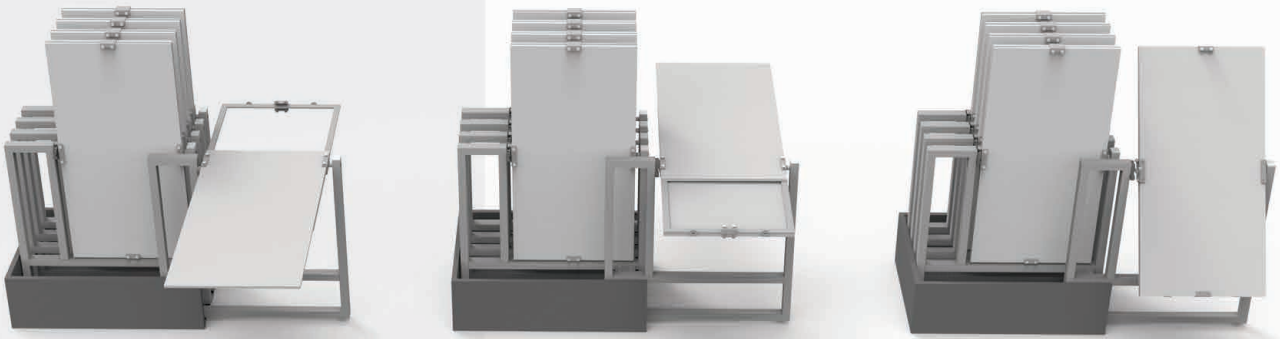

Double Side
Two Tiles

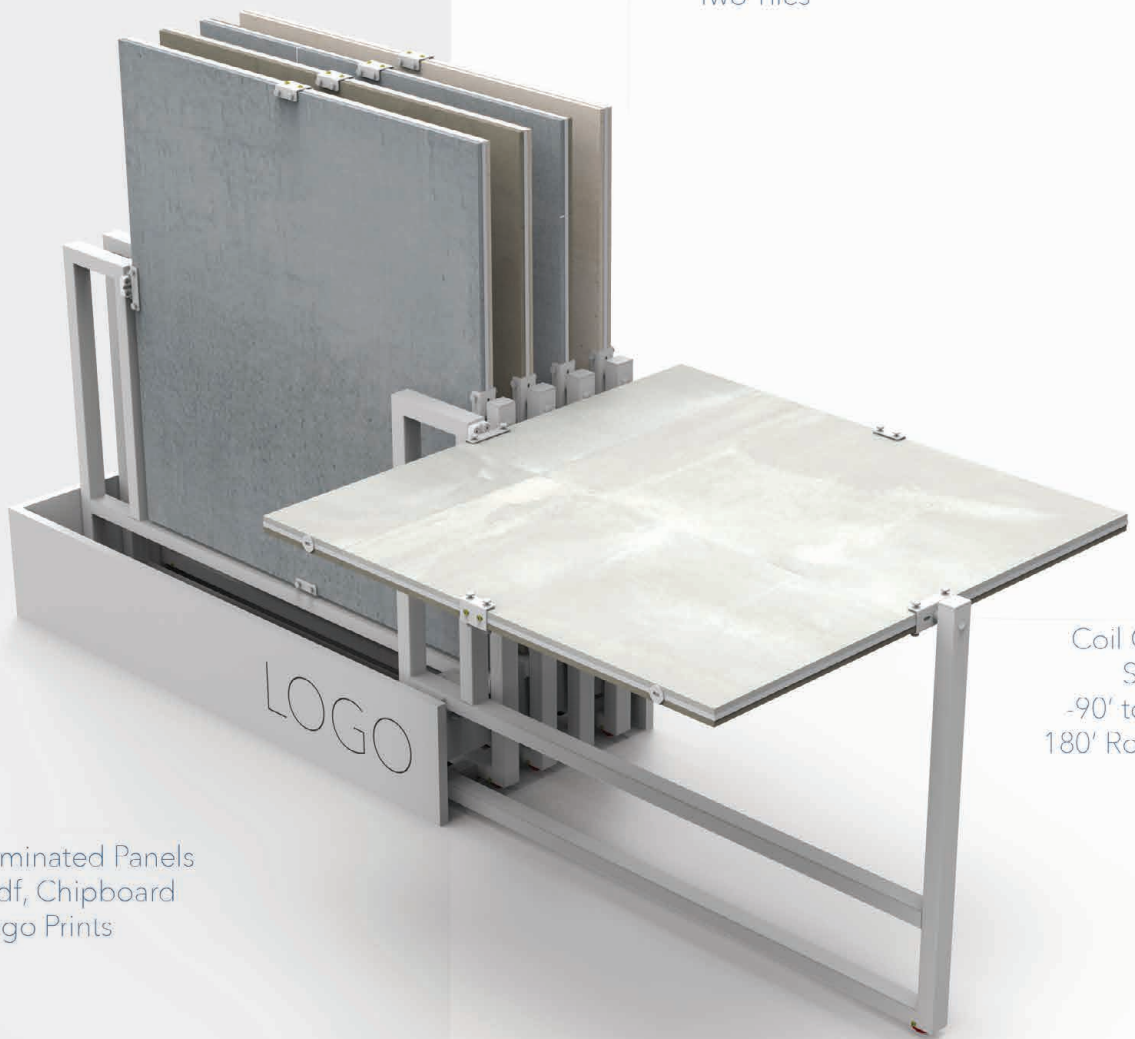

Coil Clutch
System
-90' to +90'
180' Rotating

Laminated Panels
Mdf, Chipboard
Logo Prints

BX001A

60*60

BX A SERIES

Code	Stand Size	Panels	Panel Size	Max	Packing	Total
	Cm	Qty	Cm	Kg	Cm	Kg
BX001A05	68*97*90	5*2	60*60	-	-	-
BX001A06	80*97*90	6*2	60*60	-	-	-
BX001A08	104*97*90	8*2	60*60	-	-	-
BX001A10	128*97*90	10*2	60*60	-	-	-

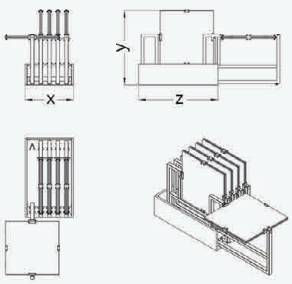

BX002A

75*75

BX A SERIES

Code	Stand Size	Panels	Panel Size	Max	Packing	Total
	Cm	Qty	Cm	Kg	Cm	Kg
BX002A05	68*112*105	5*2	75*75	-	-	-
BX002A06	80*112*105	6*2	75*75	-	-	-
BX002A08	104*112*105	8*2	75*75	-	-	-
BX002A10	128*112*105	10*2	75*75	-	-	-

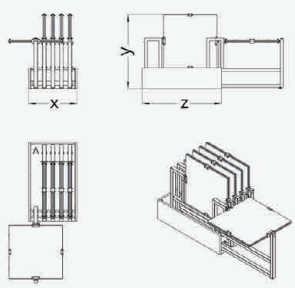

BX003A

80*80

BX A SERIES

Code	Stand Size	Panels	Panel Size	Max	Packing	Total
	Cm	Qty	Cm	Kg	Cm	Kg
BX003A05	68*117*110	5*2	80*80	-	-	-
BX003A06	80*117*110	6*2	80*80	-	-	-
BX003A08	104*117*110	8*2	80*80	-	-	-
BX003A10	128*117*110	10*2	80*80	-	-	-

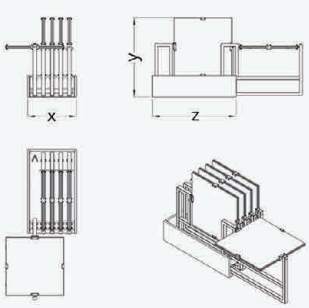

BX004A

90*90

BX A SERIES

Code	Stand Size	Panels	Panel Size	Max	Packing	Total
	Cm	Qty	Cm	Kg	Cm	Kg
BX004A05	68*127*120	5*2	90*90	-	-	-
BX004A06	80*127*120	6*2	90*90	-	-	-
BX004A08	104*127*120	8*2	90*90	-	-	-
BX004A10	128*127*120	10*2	90*90	-	-	-

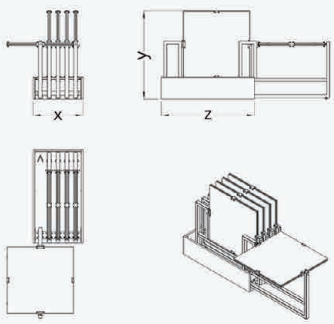

BX005A

100*100

BX A SERIES

Code	Stand Size	Panels	Panel Size	Max	Packing	Total
	Cm	Qty	Cm	Kg	Cm	Kg
BX005A05	68*137*130	5*2	100*100	-	-	-
BX005A06	80*137*130	6*2	100*100	-	-	-
BX005A08	104*137*130	8*2	100*100	-	-	-
BX005A10	128*137*130	10*2	100*100	-	-	-

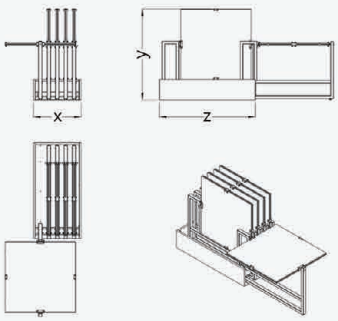

BX006A

120*120

BX A SERIES

Code	Stand Size	Panels	Panel Size	Max	Packing	Total
	Cm	Qty	Cm	Kg	Cm	Kg
BX006A05	68*157*150	5*2	120*120	-	-	-
BX006A06	80*157*150	6*2	120*120	-	-	-
BX006A08	104*157*150	8*2	120*120	-	-	-
BX006A10	128*157*150	10*2	120*120	-	-	-

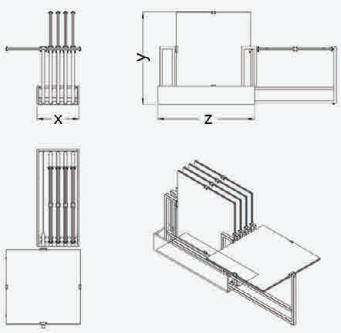

BX007A

60*120

BX A SERIES

Code	Stand Size	Panels	Panel Size	Max	Packing	Total
	Cm	Qty	Cm	Kg	Cm	Kg
BX007A05	68*97*150	5*2	60*120	-	-	-
BX007A06	80*97*150	6*2	60*120	-	-	-
BX007A08	104*97*150	8*2	60*120	-	-	-
BX007A10	128*97*150	10*2	60*120	-	-	-

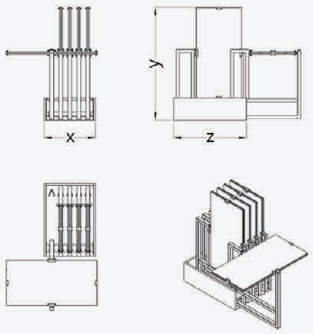

BX008A

75*150

BX A SERIES

Code	Stand Size	Panels	Panel Size	Max	Packing	Total
	Cm	Qty	Cm	Kg	Cm	Kg
BX008A05	68*112*180	5*2	75*150	-	-	-
BX008A06	80*112*180	6*2	75*150	-	-	-
BX008A08	104*112*180	8*2	75*150	-	-	-
BX008A10	128*112*180	10*2	75*150	-	-	-

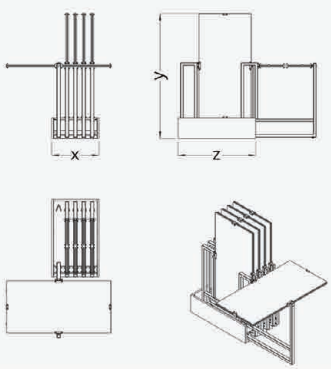

BX009A

90*180

BX A SERIES

Code	Stand Size	Panels	Panel Size	Max	Packing	Total
	Cm	Qty	Cm	Kg	Cm	Kg
BX009A05	68*127*210	5*2	90*180	-	-	-
BX009A06	80*127*210	6*2	90*180	-	-	-
BX009A08	104*127*210	8*2	90*180	-	-	-

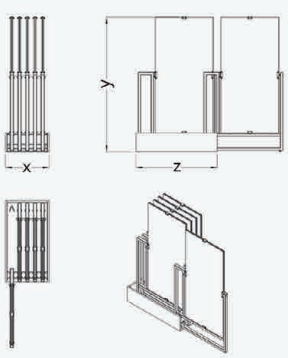

VERTICAL, PULL, ROTATING

BX010A 80*160

BX A SERIES

Code	Stand Size	Panels	Panel Size	Max	Packing	Total
	Cm	Qty	Cm	Kg	Cm	Kg
BX010A05	68*117*190	5*2	80*160	-	-	-
BX010A06	80*117*190	6*2	80*160	-	-	-
BX010A08	104*117*190	8*2	80*160	-	-	-
BX010A10		10*2	80*160	-	-	-

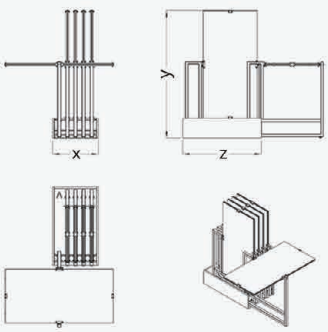

BX011A 50*100

BX A SERIES

Code	Stand Size	Panels	Panel Size	Max	Packing	Total
	Cm	Qty	Cm	Kg	Cm	Kg
BX011A05	68*87*130	5*2	50*100	-	-	-
BX011A06	80*87*130	6*2	50*100	-	-	-
BX011A08	104*87*130	8*2	50*100	-	-	-
BX011A10	128*87*130	10*2	50*100	-	-	-

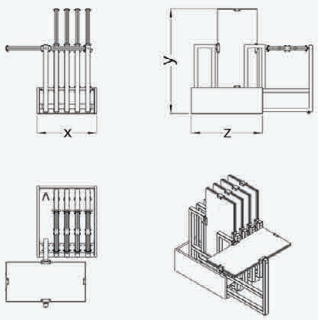

BX012A 80*180

BX A SERIES

Code	Stand Size	Panels	Panel Size	Max	Packing	Total
	Cm	Qty	Cm	Kg	Cm	Kg
BX012A05	68*117*210	5*2	80*180	-	-	-
BX012A06	80*117*210	6*2	80*180	-	-	-
BX012A08	104*117*210	8*2	80*180	-	-	-

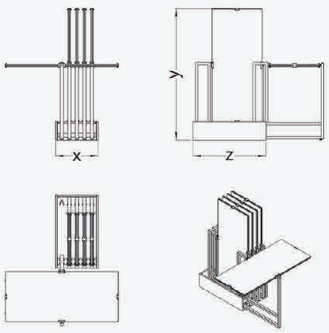

BX013A

45*90

BX A SERIES

Code	Stand Size	Panels	Panel Size	Max	Packing	Total
	Cm	Qty	Cm	Kg	Cm	Kg
BX013A05	68*82*120	5*2	45*90	-	-	-
BX013A06	80*82*120	6*2	45*90	-	-	-
BX013A08	104*82*120	8*2	45*90	-	-	-
BX013A10	128*82*120	10*2	45*90	-	-	-

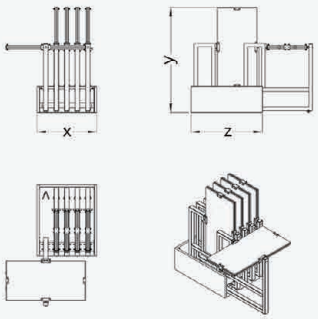

BX014A

60*160

BX A SERIES

Code	Stand Size	Panels	Panel Size	Max	Packing	Total
	Cm	Qty	Cm	Kg	Cm	Kg
BX014A05	68*97*190	5*2	60*160	-	-	-
BX014A06	80*97*190	6*2	60*160	-	-	-
BX014A08	104*97*190	8*2	60*160	-	-	-
BX014A10	128*97*190	10*2	60*160	-	-	-

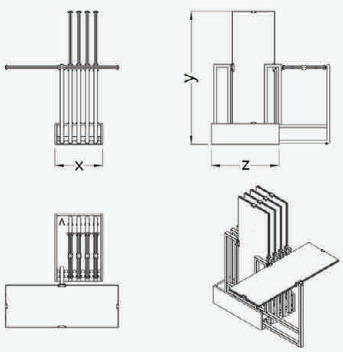

BX016A

80*120

BX A SERIES

Code	Stand Size	Panels	Panel Size	Max	Packing	Total
	Cm	Qty	Cm	Kg	Cm	Kg
BX016A05	68*117*150	5*2	80*120	-	-	-
BX016A06	80*117*150	6*2	80*120	-	-	-
BX016A08	104*117*150	8*2	80*120	-	-	-
BX016A10		10*2	80*120	-	-	-

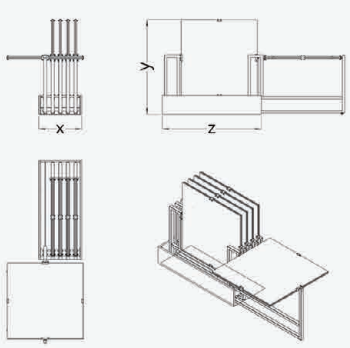

VERTICAL, PULL, ROTATING

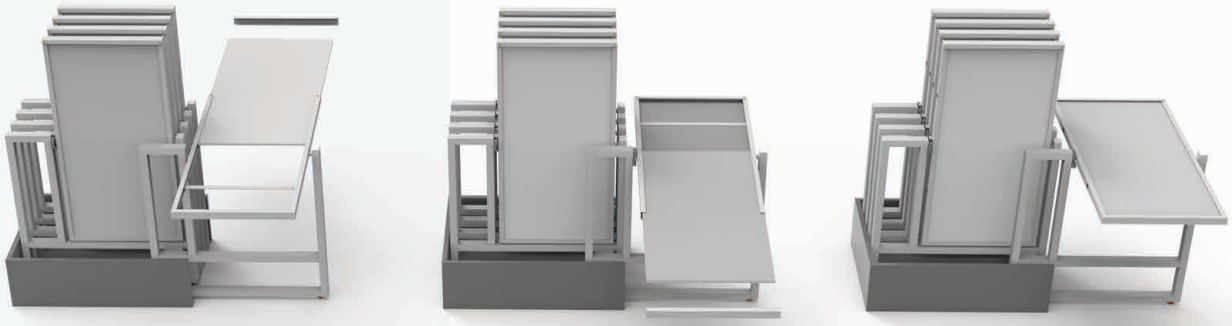

Double Side
U Close Cover
Two Tiles

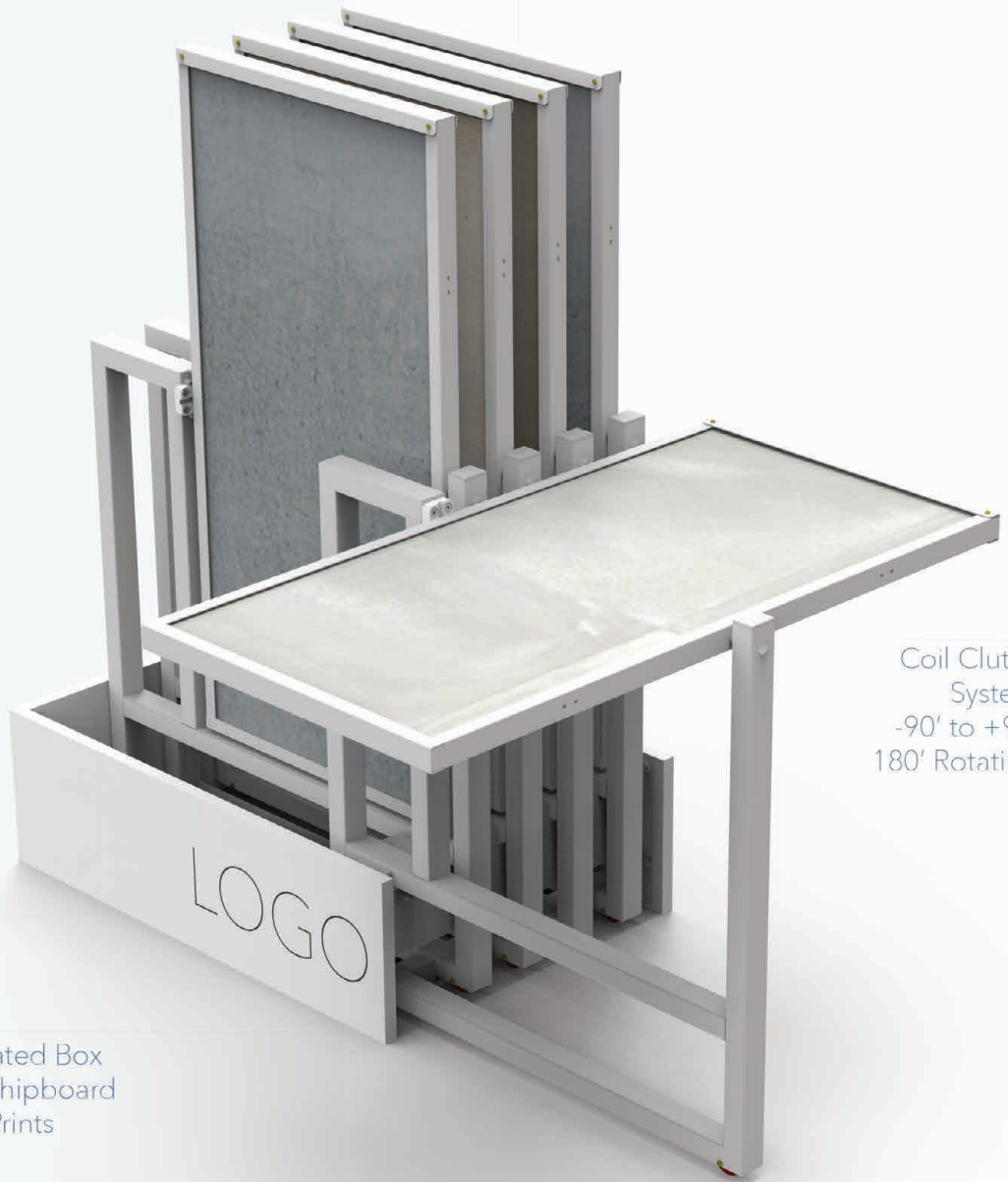

Coil Clutch
System
-90' to +90'
180' Rotating

Laminated Box
Mdf, Chipboard
Logo Prints

VERTICAL PULL ROTATING

BX00B05

B U CLOSE COVER PRF 5*2 PCS

Code	Stand Size	Panels	Panel Size	Max	Packing	Total
	Cm	Qty	Cm	Kg	Cm	Kg
BX001B05		5*2	60*60			
BX002B05		5*2	75*75			
BX003B05		5*2	80*80			
BX004B05		5*2	90*90			
BX005B05		5*2	100*100			
BX006B05		5*2	120*120			
BX007B05		5*2	60*120			
BX008B05		5*2	75*150			
BX009B05		5*2	90*180			
BX010B05		5*2	80*160			
BX011B05		5*2	50*100			
BX012B05		5*2	80*180			
BX013B05		5*2	45*90			
BX014B05		5*2	60*160			
BX016B05		5*2	80*120			

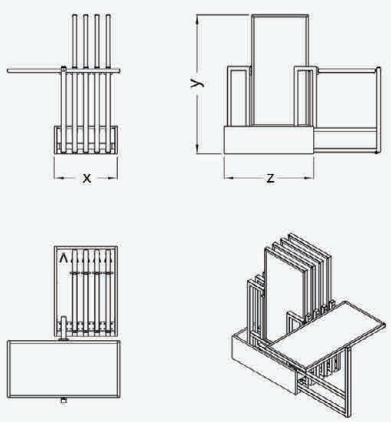

BX00B06

B U CLOSE COVER PRF 6*2 PCS

Code	Stand Size	Panels	Panel Size	Max	Packing	Total
	Cm	Qty	Cm	Kg	Cm	Kg
BX001B06		6*2	60*60			
BX002B06		6*2	75*75			
BX003B06		6*2	80*80			
BX004B06		6*2	90*90			
BX005B06		6*2	100*100			
BX006B06		6*2	120*120			
BX007B06		6*2	60*120			
BX008B06		6*2	75*150			
BX009B06		6*2	90*180			
BX010B06		6*2	80*160			
BX011B06		6*2	50*100			
BX012B06		6*2	80*180			
BX013B06		6*2	45*90			
BX014B06		6*2	60*160			
BX016B06		6*2	80*120			

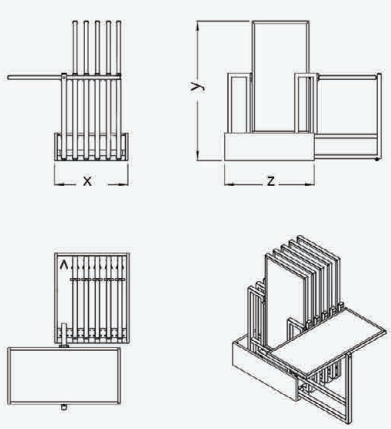

BX00B08

B U CLOSE COVER PRF 8*2 PCS

Code	Stand Size	Panels	Panel Size	Max	Packing	Total
	Cm	Qty	Cm	Kg	Cm	Kg
BX001B08		8*2	60*60			
BX002B08		8*2	75*75			
BX003B08		8*2	80*80			
BX004B08		8*2	90*90			
BX005B08		8*2	100*100			
BX006B08		8*2	120*120			
BX007B08		8*2	60*120			
BX008B08		8*2	75*150			
BX009B08		8*2	90*180			
BX010B08		8*2	80*160			
BX011B08		8*2	50*100			
BX012B08		8*2	80*180			
BX013B08		8*2	45*90			
BX014B08		8*2	60*160			
BX016B08		8*2	80*120			

*Stand Size = BX A Series

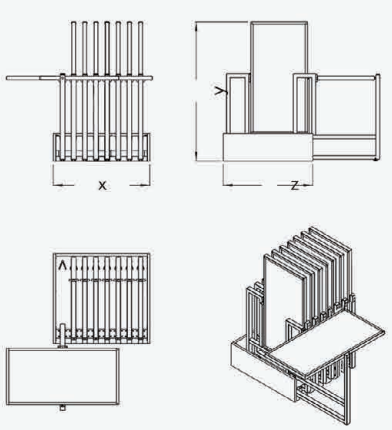

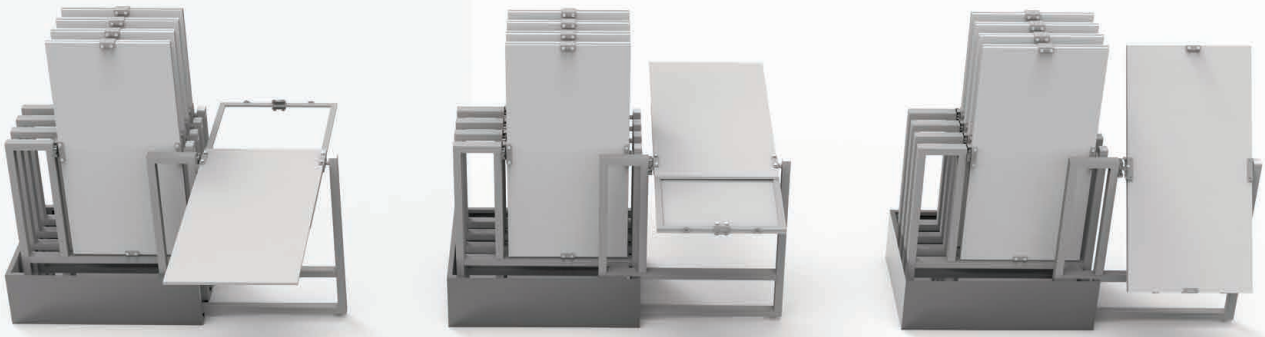

Double Side
Two Tiles

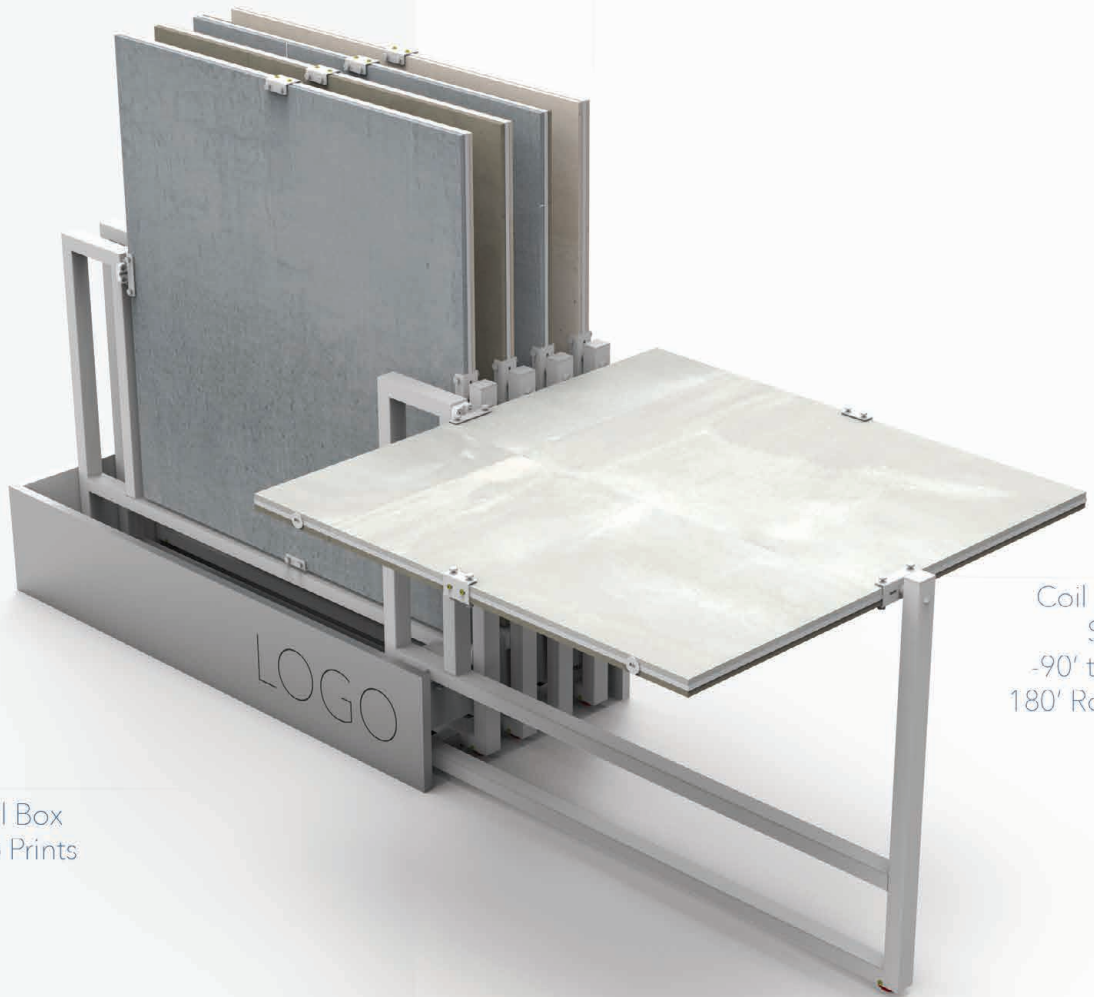

Coil Clutch
System
-90' to +90'
180' Rotating

Metal Box
Logo Prints

VERTICAL PULL ROTATING

BX001C

60*60

BX C SERIES

Code	Stand Size	Panels	Panel Size	Max	Packing	Total
	Cm	Qty	Cm	Kg	Cm	Kg
BX001C05	68*97*90	5*2	60*60	-	-	-
BX001C06	80*97*90	6*2	60*60	-	-	-
BX001C08	104*97*90	8*2	60*60	-	-	-
BX001C10	128*97*90	10*2	60*60	-	-	-

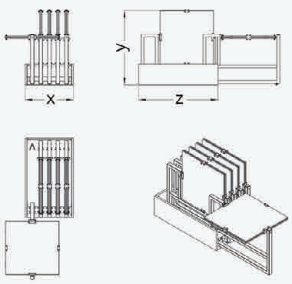

BX002C

75*75

BX C SERIES

Code	Stand Size	Panels	Panel Size	Max	Packing	Total
	Cm	Qty	Cm	Kg	Cm	Kg
BX002C05	68*112*105	5*2	75*75	-	-	-
BX002C06	80*112*105	6*2	75*75	-	-	-
BX002C08	104*112*105	8*2	75*75	-	-	-
BX002C10	128*112*105	10*2	75*75	-	-	-

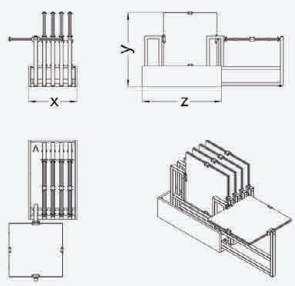

BX003C

80*80

BX C SERIES

Code	Stand Size	Panels	Panel Size	Max	Packing	Total
	Cm	Qty	Cm	Kg	Cm	Kg
BX003C05	68*117*110	5*2	80*80	-	-	-
BX003C06	80*117*110	6*2	80*80	-	-	-
BX003C08	104*117*110	8*2	80*80	-	-	-
BX003C10	128*117*110	10*2	80*80	-	-	-

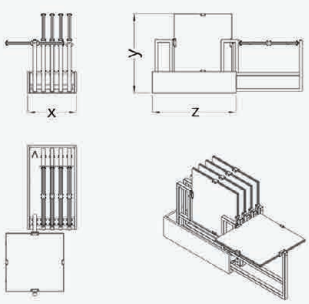

VERTICAL, PULL, ROTATING

BX004C

90*90

BX C SERIES

Code	Stand Size	Panels	Panel Size	Max	Packing	Total
	Cm	Qty	Cm	Kg	Cm	Kg
BX004C05	68*127*120	5*2	90*90	-	-	-
BX004C06	80*127*120	6*2	90*90	-	-	-
BX004C08	104*127*120	8*2	90*90	-	-	-
BX004C10	128*127*120	10*2	90*90	-	-	-

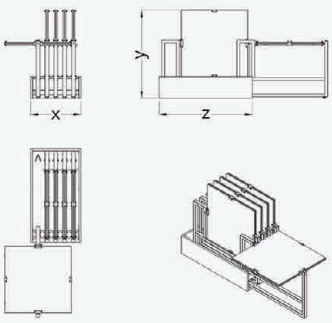

BX005C

100*100

BX C SERIES

Code	Stand Size	Panels	Panel Size	Max	Packing	Total
	Cm	Qty	Cm	Kg	Cm	Kg
BX005C05	68*137*130	5*2	100*100	-	-	-
BX005C06	80*137*130	6*2	100*100	-	-	-
BX005C08	104*137*130	8*2	100*100	-	-	-
BX005C10	128*137*130	10*2	100*100	-	-	-

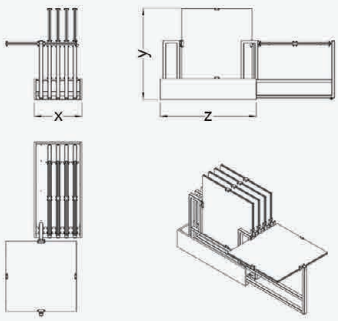

BX006C

120*120

BX C SERIES

Code	Stand Size	Panels	Panel Size	Max	Packing	Total
	Cm	Qty	Cm	Kg	Cm	Kg
BX006C05	68*157*150	5*2	120*120	-	-	-
BX006C06	80*157*150	6*2	120*120	-	-	-
BX006C08	104*157*150	8*2	120*120	-	-	-
BX006C10	128*157*150	10*2	120*120	-	-	-

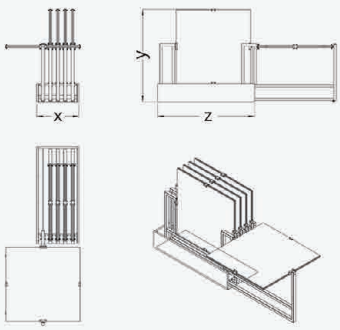

BX007C

60*120

BX C SERIES

Code	Stand Size	Panels	Panel Size	Max	Packing	Total
	Cm	Qty	Cm	Kg	Cm	Kg
BX007C05	68*97*150	5*2	60*120	-	-	-
BX007C06	80*97*150	6*2	60*120	-	-	-
BX007C08	104*97*150	8*2	60*120	-	-	-
BX007C10	128*97*150	10*2	60*120	-	-	-

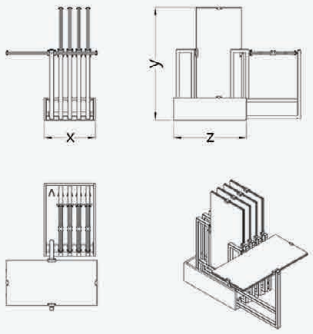

BX008C

75*150

BX C SERIES

Code	Stand Size	Panels	Panel Size	Max	Packing	Total
	Cm	Qty	Cm	Kg	Cm	Kg
BX008C05	68*112*180	5*2	75*150	-	-	-
BX008C06	80*112*180	6*2	75*150	-	-	-
BX008C08	104*112*180	8*2	75*150	-	-	-
BX008C10	128*112*180	10*2	75*150	-	-	-

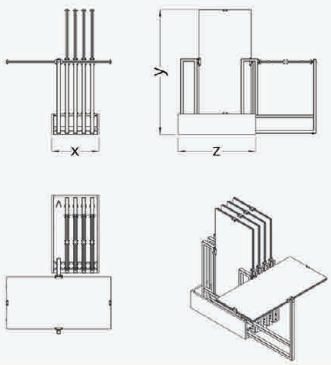

BX009C

90*180

BX C SERIES

Code	Stand Size	Panels	Panel Size	Max	Packing	Total
	Cm	Qty	Cm	Kg	Cm	Kg
BX009C05	68*127*210	5*2	90*180	-	-	-
BX009C06	80*127*210	6*2	90*180	-	-	-
BX009C08	104*127*210	8*2	90*180	-	-	-

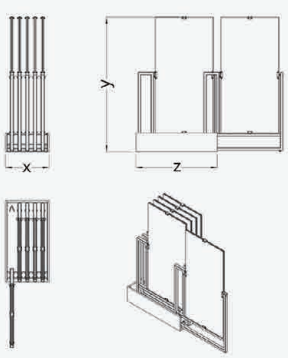

BX010C

80*160

BX C SERIES

Code	Stand Size	Panels	Panel Size	Max	Packing	Total
	Cm	Qty	Cm	Kg	Cm	Kg
BX010C05	68*117*190	5*2	80*160	-	-	-
BX010C06	80*117*190	6*2	80*160	-	-	-
BX010C08	104*117*190	8*2	80*160	-	-	-

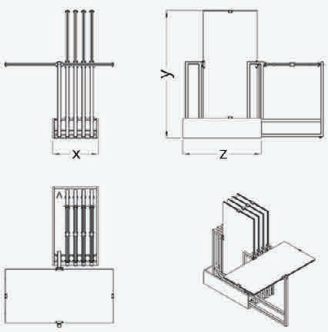

BX011C

50*100

BX C SERIES

Code	Stand Size	Panels	Panel Size	Max	Packing	Total
	Cm	Qty	Cm	Kg	Cm	Kg
BX011C05	68*87*130	5*2	50*100	-	-	-
BX011C06	80*87*130	6*2	50*100	-	-	-
BX011C08	104*87*130	8*2	50*100	-	-	-
BX011C10	128*87*130	10*2	50*100	-	-	-

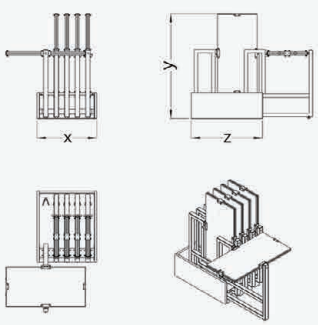

BX012C

80*180

BX C SERIES

Code	Stand Size	Panels	Panel Size	Max	Packing	Total
	Cm	Qty	Cm	Kg	Cm	Kg
BX012C05	68*117*210	5*2	80*180	-	-	-
BX012C06	80*117*210	6*2	80*180	-	-	-
BX012C08	104*117*210	8*2	80*180	-	-	-

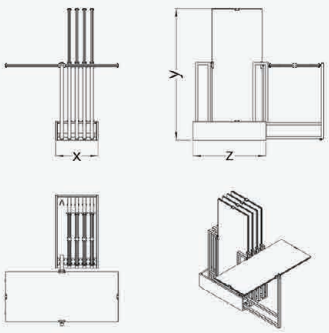

BX013C

45*90

BX C SERIES

Code	Stand Size	Panels	Panel Size	Max	Packing	Total
	Cm	Qty	Cm	Kg	Cm	Kg
BX013C05	68*82*120	5*2	45*90	-	-	-
BX013C06	80*82*120	6*2	45*90	-	-	-
BX013C08	104*82*120	8*2	45*90	-	-	-
BX013C10	128*82*120	10*2	45*90	-	-	-

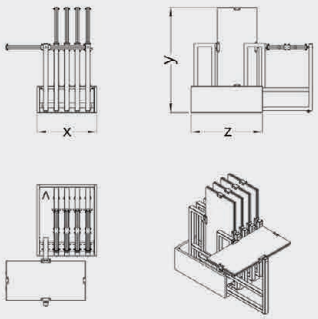

BX014C

60*160

BX C SERIES

Code	Stand Size	Panels	Panel Size	Max	Packing	Total
	Cm	Qty	Cm	Kg	Cm	Kg
BX014C05	68*97*190	5*2	60*160	-	-	-
BX014C06	80*97*190	6*2	60*160	-	-	-
BX014C08	104*97*190	8*2	60*160	-	-	-
BX014C10	128*97*190	10*2	60*160	-	-	-

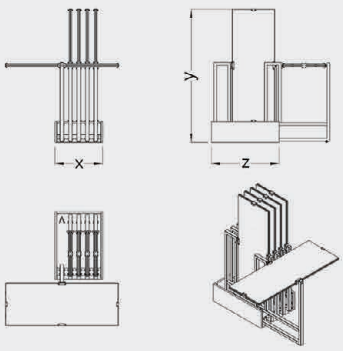

BX016C

80*120

BX C SERIES

Code	Stand Size	Panels	Panel Size	Max	Packing	Total
	Cm	Qty	Cm	Kg	Cm	Kg
BX016C05	68*117*150	5*2	80*120	-	-	-
BX016C06	80*117*150	6*2	80*120	-	-	-
BX016C08	104*117*150	8*2	80*120	-	-	-

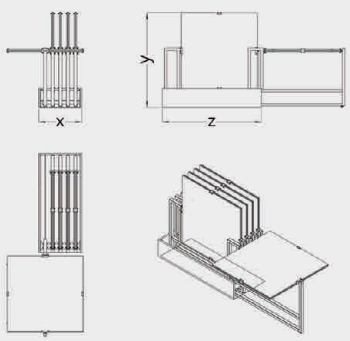

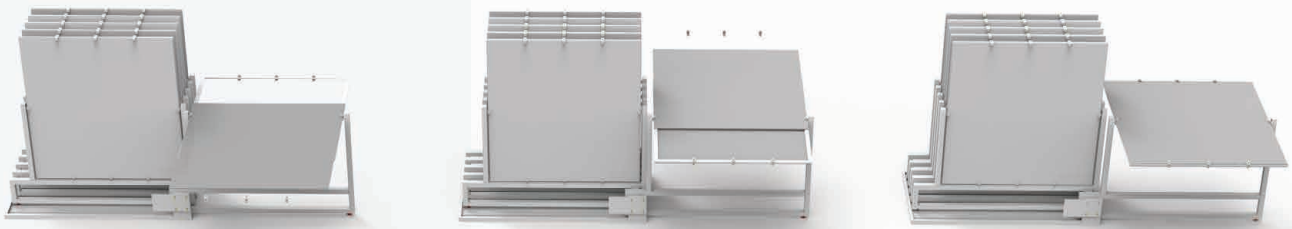

Double Side
Two Tiles

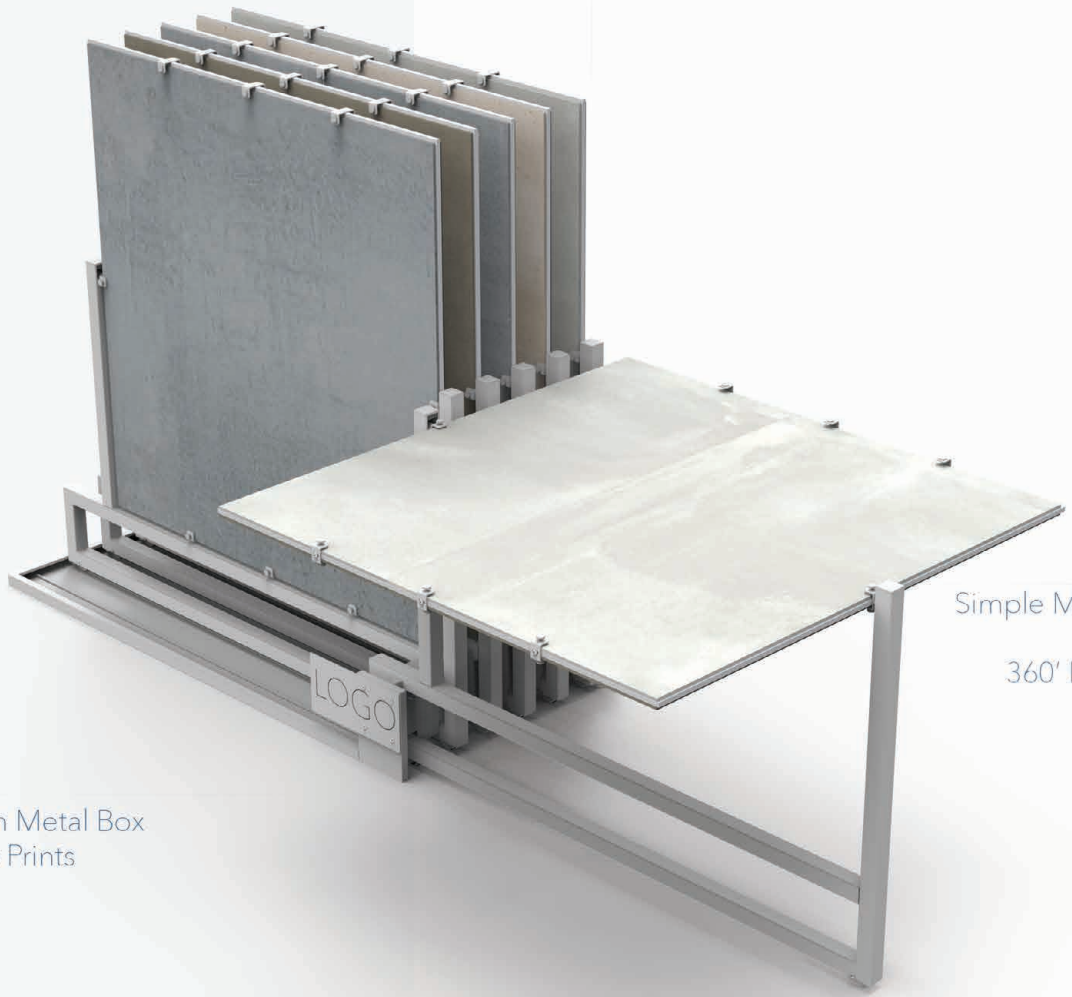

Simple Mechanic
System
360' Rotating

Open Metal Box
Logo Prints

VERTICAL PULL ROTATING

BX F SERIES

F VERTICAL PULL ROTATING OPEN PRF 5*2 PCS

Code	Stand Size	Panels	Panel Size	Max	Packing	Total
	Cm	Qty	Cm	Kg	Cm	Kg
BX001F05		5*2	60*60			
BX002F05		5*2	75*75			
BX003F05		5*2	80*80			
BX004F05		5*2	90*90			
BX005F05		5*2	100*100			
BX006F05		5*2	120*120			
BX007F05		5*2	60*120			
BX008F05		5*2	75*150			
BX009F05		5*2	90*180			
BX010F05		5*2	80*160			
BX011F05		5*2	50*100			
BX012F05		5*2	80*180			
BX013F05		5*2	45*90			
BX014F05		5*2	60*160			
BX016F05		5*2	80*120			

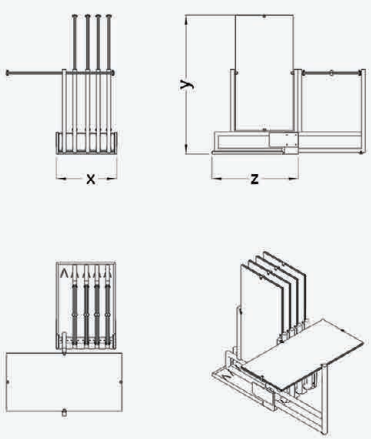

BX F SERIES

F VERTICAL PULL ROTATING OPEN PRF 6*2 PCS

Code	Stand Size	Panels	Panel Size	Max	Packing	Total
	Cm	Qty	Cm	Kg	Cm	Kg
BX001F06		6*2	60*60			
BX002F06		6*2	75*75			
BX003F06		6*2	80*80			
BX004F06		6*2	90*90			
BX005F06		6*2	100*100			
BX006F06		6*2	120*120			
BX007F06		6*2	60*120			
BX008F06		6*2	75*150			
BX009F06		6*2	90*180			
BX010F06		6*2	80*160			
BX011F06		6*2	50*100			
BX012F06		6*2	80*180			
BX013F06		6*2	45*90			
BX014F06		6*2	60*160			
BX016F06		6*2	80*120			

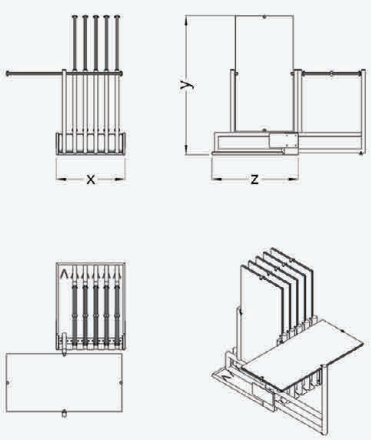

BX F SERIES

F VERTICAL PULL ROTATING OPEN PRF 8*2 PCS

Code	Stand Size	Panels	Panel Size	Max	Packing	Total
	Cm	Qty	Cm	Kg	Cm	Kg
BX001F08		8*2	60*60			
BX002F08		8*2	75*75			
BX003F08		8*2	80*80			
BX004F08		8*2	90*90			
BX005F08		8*2	100*100			
BX006F08		8*2	120*120			
BX007F08		8*2	60*120			
BX008F08		8*2	75*150			
BX009F08		8*2	90*180			
BX010F08		8*2	80*160			
BX011F08		8*2	50*100			
BX012F08		8*2	80*180			
BX013F08		8*2	45*90			
BX014F08		8*2	60*160			
BX016F08		8*2	80*120			

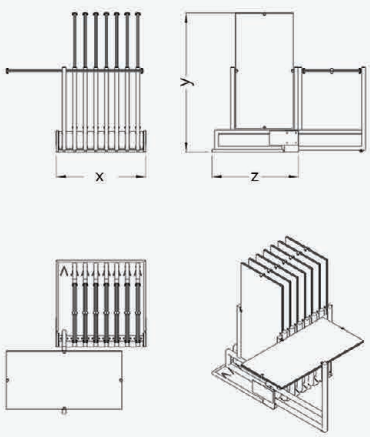

Double Side
Two Tiles

Simple Mechanic
System
360' Rotating

Open Laml Box
Logo Prints

VERTICAL PULL ROTATING

NEW

BX K SERIES

K VERTICAL PULL ROTATING OPEN PRF 8*2 PCS

Code	Stand Size	Panels	Panel Size	Max	Packing	Total
	Cm	Qty	Cm	Kg	Cm	Kg
BX001K08		8*2	120*50			

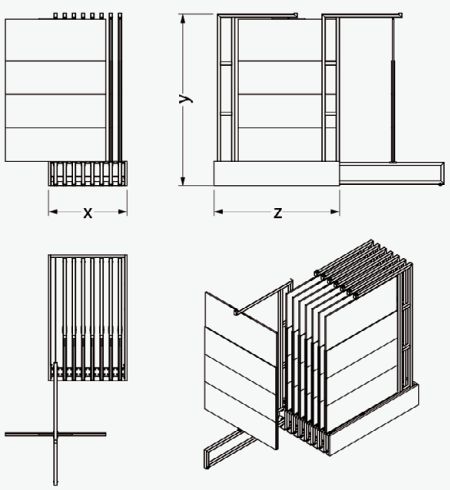

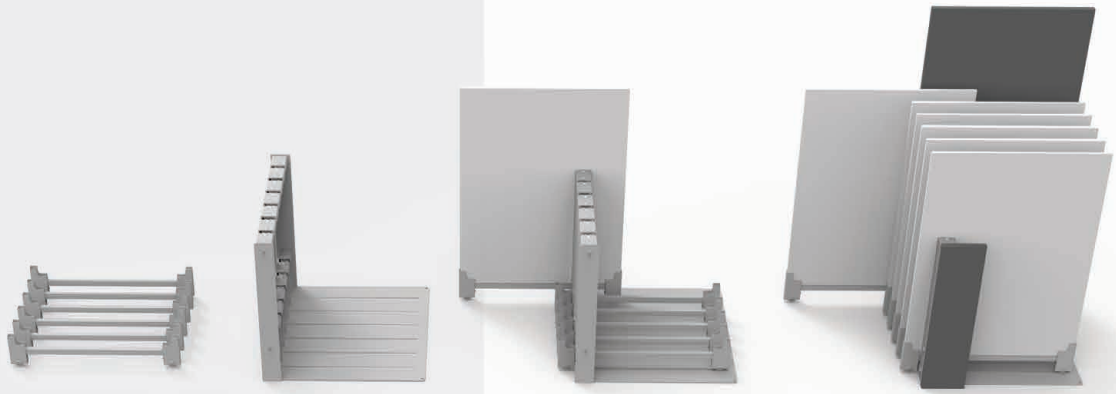

Panel's
Digital Prints

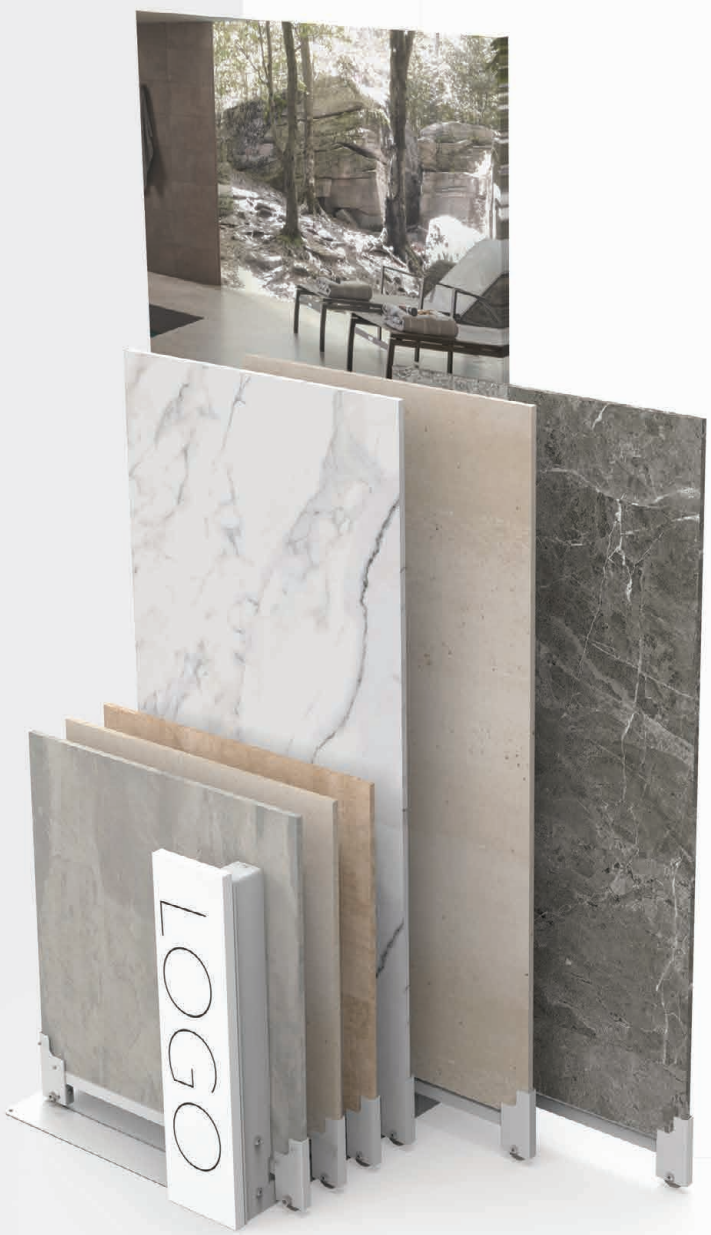

Single Side
One Tile

Panels
Logo Prints

Base Unit
Single Side
& Base Plate

Carts
Single Side

BX900M05

M VERTICAL PULL UNIT 5*1K

Code	Stand Size	Panels	Panel Size	Max	Packing	Total
	Cm	Qty	Cm	Kg	Cm	Kg
BX901M05	-	5*1	60	-	-	-
BX902M05	-	5*1	75	-	-	-
BX903M05	-	5*1	80	-	-	-
BX904M05	-	5*1	90	-	-	-
BX905M05	-	5*1	100	-	-	-
BX906M05	-	5*1	120	-	-	-

BX900M06

M VERTICAL PULL UNIT 6*1K

Code	Stand Size	Panels	Panel Size	Max	Packing	Total
	Cm	Qty	Cm	Kg	Cm	Kg
BX901M06	-	6*1	60	-	-	-
BX902M06	-	6*1	75	-	-	-
BX903M06	-	6*1	80	-	-	-
BX904M06	-	6*1	90	-	-	-
BX905M06	-	6*1	100	-	-	-
BX906M06	-	6*1	120	-	-	-

BX900M08

M VERTICAL PULL UNIT 8*1K

Code	Stand Size	Panels	Panel Size	Max	Packing	Total
	Cm	Qty	Cm	Kg	Cm	Kg
BX901M08	-	8*1	60	-	-	-
BX902M08	-	8*1	75	-	-	-
BX903M08	-	8*1	80	-	-	-
BX904M08	-	8*1	90	-	-	-
BX905M08	-	8*1	100	-	-	-
BX906M08	-	8*1	120	-	-	-

BX900M10

M VERTICAL PULL UNIT 10*1K

Code	Stand Size	Panels	Panel Size	Max	Packing	Total
	Cm	Qty	Cm	Kg	Cm	Kg
BX901M10	-	10*1	60	-	-	-
BX902M10	-	10*1	75	-	-	-
BX903M10	-	10*1	80	-	-	-
BX904M10	-	10*1	90	-	-	-
BX905M10	-	10*1	100	-	-	-
BX906M10	-	10*1	120	-	-	-

BX004M00

M VERTICAL PULL CARTS 45CM *1 PCS

Code	Stand Size	Panels	Panel Size	Max	Packing	Total
	Cm	Qty	Cm	Kg	Cm	Kg
BX004M00	45	1	45	-	-	-

BX005M00

M VERTICAL PULL CARTS 50CM *1 PCS

Code	Stand Size	Panels	Panel Size	Max	Packing	Total
	Cm	Qty	Cm	Kg	Cm	Kg
BX005M00	50	1	50	-	-	-

BX006M00

M VERTICAL PULL CARTS 60CM *1 PCS

Code	Stand Size	Panels	Panel Size	Max	Packing	Total
	Cm	Qty	Cm	Kg	Cm	Kg
BX006M00	60	1	60	-	-	-

BX007M00

M VERTICAL PULL CARTS 75CM *1 PCS

Code	Stand Size	Panels	Panel Size	Max	Packing	Total
	Cm	Qty	Cm	Kg	Cm	Kg
BX007M00	75	1	75	-	-	-

BX008M00

M VERTICAL PULL CARTS 80CM *1 PCS

Code	Stand Size	Panels	Panel Size	Max	Packing	Total
	Cm	Qty	Cm	Kg	Cm	Kg
BX008M00	80	1	80	-	-	-

BX009M00

M VERTICAL PULL CARTS 90CM *1 PCS

Code	Stand Size	Panels	Panel Size	Max	Packing	Total
	Cm	Qty	Cm	Kg	Cm	Kg
BX009M00	90	1	90	-	-	-

BX010M00

M VERTICAL PULL CARTS 100CM *1 PCS

Code	Stand Size	Panels	Panel Size	Max	Packing	Total
	Cm	Qty	Cm	Kg	Cm	Kg
BX010M00	100	1	100	-	-	-

BX012M00

M VERTICAL PULL CARTS 120CM *1 PCS

Code	Stand Size	Panels	Panel Size	Max	Packing	Total
	Cm	Qty	Cm	Kg	Cm	Kg
BX012M00	120	1	120	-	-	-

BX006M00

60*

M VERTICAL PULL 60CM 5,6,8*1 PCS

Code	Stand Size	Panels	Panel Size	Max	Packing	Total
	Cm	Qty	Cm	Kg	Cm	Kg
BX006M05	50*64*59	5*1	60	-	-	-
BX006M06	59*64*59	6*1	60	-	-	-
BX006M08	76*64*59	8*1	60	-	-	-

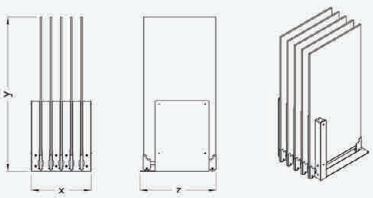

BX007M00

75*

M VERTICAL PULL 75CM 5,6,8*1 PCS

Code	Stand Size	Panels	Panel Size	Max	Packing	Total
	Cm	Qty	Cm	Kg	Cm	Kg
BX007M05	50*78*59	5*1	75	-	-	-
BX007M06	59*78*59	6*1	75	-	-	-
BX007M08	76*78*59	8*1	75	-	-	-

BX008M00

80*

M VERTICAL PULL 80CM 5,6,8 *1 PCS

Code	Stand Size	Panels	Panel Size	Max	Packing	Total
	Cm	Qty	Cm	Kg	Cm	Kg
BX008M05	50*84* 59	5*1	80	-	-	-
BX008M06	59*84* 59	6*1	80	-	-	-
BX008M08	76*84* 59	8*1	80	-	-	-

BX009M00

90*

M VERTICAL PULL 90CM 5,6,8*1 PCS

Code	Stand Size	Panels	Panel Size	Max	Packing	Total
	Cm	Qty	Cm	Kg	Cm	Kg
BX009M05	50*94*59	5*1	90	-	-	-
BX009M06	59*94*59	6*1	90	-	-	-
BX009M08	76*94*59	8*1	90	-	-	-

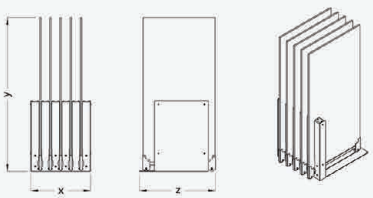

BX010M00

100*

M VERTICAL PULL 100CM 5,6,8*1 PCS

Code	Stand Size	Panels	Panel Size	Max	Packing	Total
	Cm	Qty	Cm	Kg	Cm	Kg
BX010M05	50*104*59	5*1	100	-	-	-
BX010M06	59*104*59	6*1	100	-	-	-
BX010M08	76*104*59	8*1	100	-	-	-

BX012M00

120*

M VERTICAL PULL 120CM 5,6,8 *1 PCS

Code	Stand Size	Panels	Panel Size	Max	Packing	Total
	Cm	Qty	Cm	Kg	Cm	Kg
BX012M05	50*124* 59	5*1	120	-	-	-
BX012M06	59*124* 59	6*1	120	-	-	-
BX012M08	76*124* 59	8*1	120	-	-	-

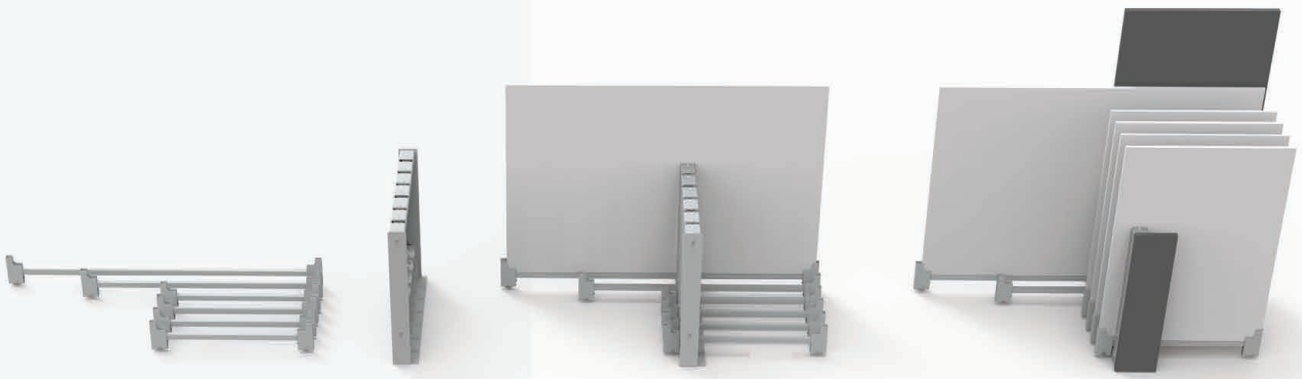

Panel's
Digital Prints

Single Side
One Tile

Panels
Logo Prints

Base Unit
Single Side
& Base Plate

Carts
Single Side

VERTICAL PULL

BX900N05

N VERTICAL PULL UNIT 5*1K

Code	Stand Size	Panels	Panel Size	Max	Packing	Total
	Cm	Qty	Cm	Kg	Cm	Kg
BX900N05	-	5*1	ALL	-	-	-

BX900N06

N VERTICAL PULL UNIT 6*1K

Code	Stand Size	Panels	Panel Size	Max	Packing	Total
	Cm	Qty	Cm	Kg	Cm	Kg
BX900N06	-	6*1	ALL	-	-	-

BX900N08

N VERTICAL PULL UNIT 8*1K

Code	Stand Size	Panels	Panel Size	Max	Packing	Total
	Cm	Qty	Cm	Kg	Cm	Kg
BX900N08	-	8*1	ALL	-	-	-

BX900N10

N VERTICAL PULL UNIT 10*1K

Code	Stand Size	Panels	Panel Size	Max	Packing	Total
	Cm	Qty	Cm	Kg	Cm	Kg
BX900N10	-	10*1	ALL	-	-	-

BX004N00

N VERTICAL PULL CARTS 45CM *1 PCS

Code	Stand Size	Panels	Panel Size	Max	Packing	Total
	Cm	Qty	Cm	Kg	Cm	Kg
BX004N00	45	1	45	-	-	-

BX005N00

N VERTICAL PULL CARTS 50CM *1 PCS

Code	Stand Size	Panels	Panel Size	Max	Packing	Total
	Cm	Qty	Cm	Kg	Cm	Kg
BX005N00	50	1	50	-	-	-

BX006N00

N VERTICAL PULL CARTS 60CM *1 PCS

Code	Stand Size	Panels	Panel Size	Max	Packing	Total
	Cm	Qty	Cm	Kg	Cm	Kg
BX006N00	60	1	60	-	-	-

BX007N00

N VERTICAL PULL CARTS 75CM *1 PCS

Code	Stand Size	Panels	Panel Size	Max	Packing	Total
	Cm	Qty	Cm	Kg	Cm	Kg
BX007N00	75	1	75	-	-	-

BX008N00

N VERTICAL PULL CARTS 80CM *1 PCS

Code	Stand Size	Panels	Panel Size	Max	Packing	Total
	Cm	Qty	Cm	Kg	Cm	Kg
BX008N00	80	1	80	-	-	-

BX009N00

N VERTICAL PULL CARTS 90CM *1 PCS

Code	Stand Size	Panels	Panel Size	Max	Packing	Total
	Cm	Qty	Cm	Kg	Cm	Kg
BX009N00	90	1	90	-	-	-

BX010N00

N VERTICAL PULL CARTS 100CM *1 PCS

Code	Stand Size	Panels	Panel Size	Max	Packing	Total
	Cm	Qty	Cm	Kg	Cm	Kg
BX010N00	100	1	100	-	-	-

BX012N00

N VERTICAL PULL CARTS 120CM *1 PCS

Code	Stand Size	Panels	Panel Size	Max	Packing	Total
	Cm	Qty	Cm	Kg	Cm	Kg
BX012N00	120	1	120	-	-	-

BX006N00 60*

N VERTICAL PULL 60CM 5,6,8*1 PCS

Code	Stand Size	Panels	Panel Size	Max	Packing	Total
	Cm	Qty	Cm	Kg	Cm	Kg
BX006N05	50*64*59	5*1	60	-	-	-
BX006N06	59*64*59	6*1	60	-	-	-
BX006N08	76*64*59	8*1	60	-	-	-
BX006N10		10*1	60	-	-	-

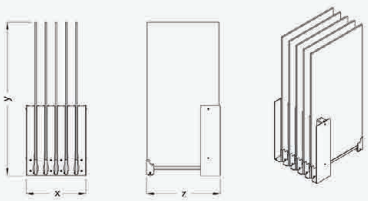

BX007N00 75*

N VERTICAL PULL 75CM 5,6,8*1 PCS

Code	Stand Size	Panels	Panel Size	Max	Packing	Total
	Cm	Qty	Cm	Kg	Cm	Kg
BX007N05	50*78*59	5*1	75	-	-	-
BX007N06	59*78*59	6*1	75	-	-	-
BX007N08	76*78*59	8*1	75	-	-	-
BX007N10		10*1	75	-	-	-

BX008N00 80*

N VERTICAL PULL 80CM 5,6,8 *1 PCS

Code	Stand Size	Panels	Panel Size	Max	Packing	Total
	Cm	Qty	Cm	Kg	Cm	Kg
BX008N05	50*84* 59	5*1	80	-	-	-
BX008N06	59*84* 59	6*1	80	-	-	-
BX008N08	76*84* 59	8*1	80	-	-	-
BX008N10		10*1	80	-	-	-

BX009N00

90*

N VERTICAL PULL 90CM 5,6,8*1 PCS

Code	Stand Size	Panels	Panel Size	Max	Packing	Total
	Cm	Qty	Cm	Kg	Cm	Kg
BX009N05	50*94*59	5*1	90	-	-	-
BX009N06	59*94*59	6*1	90	-	-	-
BX009N08	76*94*59	8*1	90	-	-	-
BX009N10		10*1	90	-	-	-

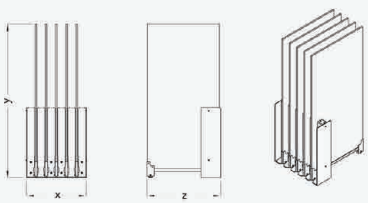

BX010N00

100*

N VERTICAL PULL 100CM 5,6,8*1 PCS

Code	Stand Size	Panels	Panel Size	Max	Packing	Total
	Cm	Qty	Cm	Kg	Cm	Kg
BX010N05	50*104*59	5*1	100	-	-	-
BX010N06	59*104*59	6*1	100	-	-	-
BX010N08	76*104*59	8*1	100	-	-	-
BX010N10		10*1	100	-	-	-

BX012N00

120*

N VERTICAL PULL 120CM 5,6,8 *1 PCS

Code	Stand Size	Panels	Panel Size	Max	Packing	Total
	Cm	Qty	Cm	Kg	Cm	Kg
BX012N05	50*124* 59	5*1	120	-	-	-
BX012N06	59*124* 59	6*1	120	-	-	-
BX012N08	76*124* 59	8*1	120	-	-	-
BX012N10		5*1	120	-	-	-

BX P SERIES DOUBLE SIDED

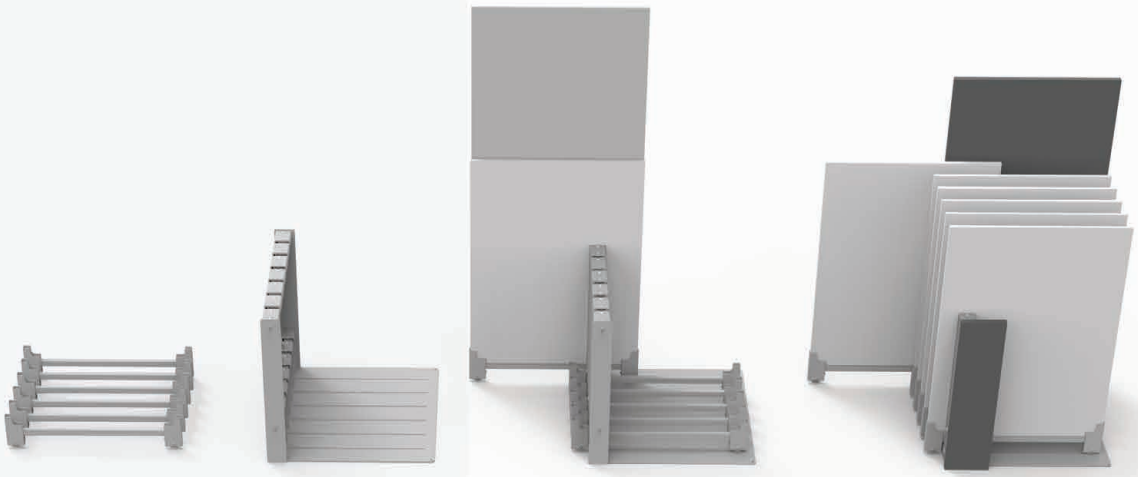

Panel's
Digital Prints

Double Side
Two Tiles

Panels
Logo Prints

Base Unit
Double Side
& Base Plate

Carts
Double Side

BX900P05

P VERTICAL PULL UNIT 5*2K

Code	Stand Size	Panels	Panel Size	Max	Packing	Total
	Cm	Qty	Cm	Kg	Cm	Kg
BX901P05	-	5*2	60	-	-	-
BX902P05	-	5*2	75	-	-	-
BX903P05	-	5*2	80	-	-	-
BX904P05	-	5*2	90	-	-	-
BX905P05	-	5*2	100	-	-	-
BX906P05	-	5*2	120	-	-	-

BX900P06

P VERTICAL PULL UNIT 6*2K

Code	Stand Size	Panels	Panel Size	Max	Packing	Total
	Cm	Qty	Cm	Kg	Cm	Kg
BX901P06	-	6*2	60	-	-	-
BX902P06	-	6*2	75	-	-	-
BX903P06	-	6*2	80	-	-	-
BX904P06	-	6*2	90	-	-	-
BX905P06	-	6*2	100	-	-	-
BX906P06	-	6*2	120	-	-	-

BX900P08

P VERTICAL PULL UNIT 8*2K

Code	Stand Size	Panels	Panel Size	Max	Packing	Total
	Cm	Qty	Cm	Kg	Cm	Kg
BX901P08	-	8*2	60	-	-	-
BX902P08	-	8*2	75	-	-	-
BX903P08	-	8*2	80	-	-	-
BX904P08	-	8*2	90	-	-	-
BX905P08	-	8*2	100	-	-	-
BX906P08	-	8*2	120	-	-	-

BX900P10

P VERTICAL PULL UNIT 10*2K

Code	Stand Size	Panels	Panel Size	Max	Packing	Total
	Cm	Qty	Cm	Kg	Cm	Kg
BX901P10	-	10*2	60	-	-	-
BX902P10	-	10*2	75	-	-	-
BX903P10	-	10*2	80	-	-	-
BX904P10	-	10*2	90	-	-	-
BX905P10	-	10*2	100	-	-	-
BX906P10	-	10*2	120	-	-	-

BX004P00

P VERTICAL PULL CARTS 45CM *2 PCS

Code	Stand Size	Panels	Panel Size	Max	Packing	Total
	Cm	Qty	Cm	Kg	Cm	Kg
BX004P00	45	2	45	-	-	-

BX005P00

P VERTICAL PULL CARTS 50CM *2 PCS

Code	Stand Size	Panels	Panel Size	Max	Packing	Total
	Cm	Qty	Cm	Kg	Cm	Kg
BX005P00	50	2	50	-	-	-

BX006P00

P VERTICAL PULL CARTS 60CM *2 PCS

Code	Stand Size	Panels	Panel Size	Max	Packing	Total
	Cm	Qty	Cm	Kg	Cm	Kg
BX006P00	60	2	60	-	-	-

BX007P00

P VERTICAL PULL CARTS 75CM *2 PCS

Code	Stand Size	Panels	Panel Size	Max	Packing	Total
	Cm	Qty	Cm	Kg	Cm	Kg
BX007P00	75	2	75	-	-	-

BX008P00

P VERTICAL PULL CARTS 80CM *2 PCS

Code	Stand Size	Panels	Panel Size	Max	Packing	Total
	Cm	Qty	Cm	Kg	Cm	Kg
BX008P00	80	2	80	-	-	-

BX009P00

P VERTICAL PULL CARTS 90CM *2 PCS

Code	Stand Size	Panels	Panel Size	Max	Packing	Total
	Cm	Qty	Cm	Kg	Cm	Kg
BX009P00	90	2	90	-	-	-

BX010P00

P VERTICAL PULL CARTS 100CM *2 PCS

Code	Stand Size	Panels	Panel Size	Max	Packing	Total
	Cm	Qty	Cm	Kg	Cm	Kg
BX010P00	100	2	100	-	-	-

BX012P00

P VERTICAL PULL CARTS 120CM *2 PCS

Code	Stand Size	Panels	Panel Size	Max	Packing	Total
	Cm	Qty	Cm	Kg	Cm	Kg
BX012P00	120	2	120	-	-	-

BX006P00

60*

P VERTICAL PULL 60CM 5,6,8*2 PCS

Code	Stand Size	Panels	Panel Size	Max	Packing	Total
	Cm	Qty	Cm	Kg	Cm	Kg
BX006P05	54*64*59	5*2	60	-	-	-
BX006P06	64*64*59	6*2	60	-	-	-
BX006P08	84*64*59	8*2	60	-	-	-
BX006P10		10*2	60	-	-	-

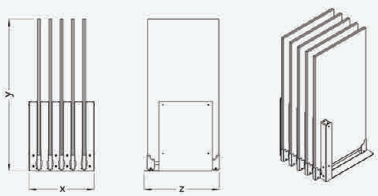

BX007P00

75*

P VERTICAL PULL 75CM 5,6,8*2 PCS

Code	Stand Size	Panels	Panel Size	Max	Packing	Total
	Cm	Qty	Cm	Kg	Cm	Kg
BX007P05	54*78*59	5*2	75	-	-	-
BX007P06	64*78*59	6*2	75	-	-	-
BX007P08	84*78*59	8*2	75	-	-	-
BX007P08		10*2	75	-	-	-

BX008P00

80*

P VERTICAL PULL 80CM 5,6,8 *2 PCS

Code	Stand Size	Panels	Panel Size	Max	Packing	Total
	Cm	Qty	Cm	Kg	Cm	Kg
BX008P05	54*84* 59	5*2	80	-	-	-
BX008P06	64*84* 59	6*2	80	-	-	-
BX008P08	84*84* 59	8*2	80	-	-	-
BX008P10		10*2	80	-	-	-

BX009P00

90*

P VERTICAL PULL 90CM 5,6,8*2 PCS

Code	Stand Size	Panels	Panel Size	Max	Packing	Total
	Cm	Qty	Cm	Kg	Cm	Kg
BX009P05	54*94*59	5*2	90	-	-	-
BX009P06	64*94*59	6*2	90	-	-	-
BX009P08	84*94*59	8*2	90	-	-	-
BX009P10		10*2	90	-	-	-

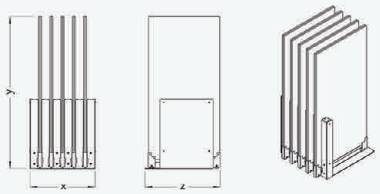

BX010P00

100*

P VERTICAL PULL 100CM 5,6,8*2 PCS

Code	Stand Size	Panels	Panel Size	Max	Packing	Total
	Cm	Qty	Cm	Kg	Cm	Kg
BX010P05	54*104*59	5*2	100	-	-	-
BX010P06	64*104*59	6*2	100	-	-	-
BX010P08	84*104*59	8*2	100	-	-	-
BX010P10		10*2	100	-	-	-

BX012P00

120*

P VERTICAL PULL 120CM 5,6,8 *2 PCS

Code	Stand Size	Panels	Panel Size	Max	Packing	Total
	Cm	Qty	Cm	Kg	Cm	Kg
BX012P05	54*124* 59	5*2	120	-	-	-
BX012P06	64*124* 59	6*2	120	-	-	-
BX012P08	84*124* 59	8*2	120	-	-	-
BX012P10		10*2	120	-	-	-

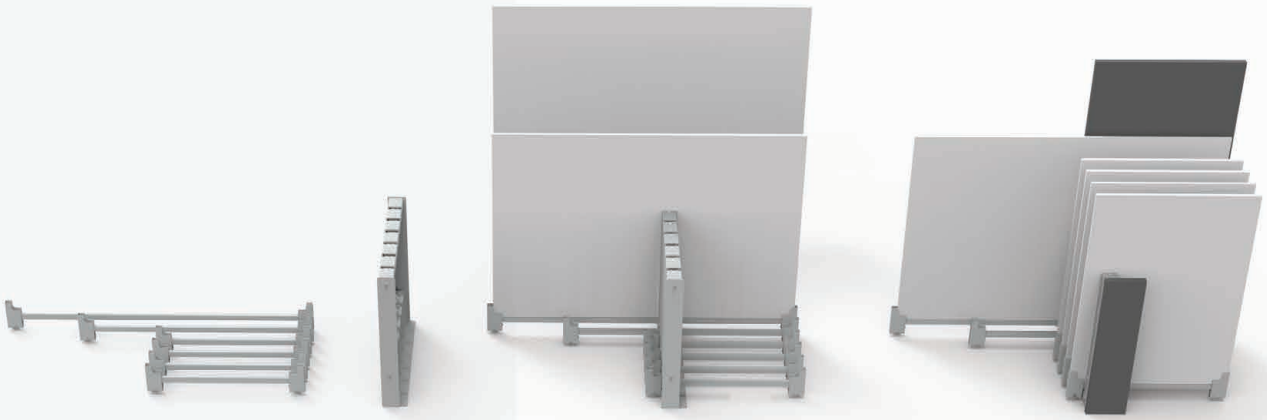

Panel's
Digital Prints

Double Side
Two Tiles

Panels
Logo Prints

Base Unit
Double Side

Carts
Double Side

VERTICAL PULL

BX900R05

R VERTICAL PULL UNIT 5*2K

Code	Stand Size	Panels	Panel Size	Max	Packing	Total
	Cm	Qty	Cm	Kg	Cm	Kg
BX900R05	-	5*2	ALL	-	-	-

BX900R06

R VERTICAL PULL UNIT 6*2K

Code	Stand Size	Panels	Panel Size	Max	Packing	Total
	Cm	Qty	Cm	Kg	Cm	Kg
BX900R06	-	6*2	ALL	-	-	-

BX900R08

R VERTICAL PULL UNIT 8*2K

Code	Stand Size	Panels	Panel Size	Max	Packing	Total
	Cm	Qty	Cm	Kg	Cm	Kg
BX900R08	-	8*2	ALL	-	-	-

BX900R10

R VERTICAL PULL UNIT 10*2K

Code	Stand Size	Panels	Panel Size	Max	Packing	Total
	Cm	Qty	Cm	Kg	Cm	Kg
BX900R10	-	10*2	ALL	-	-	-

BX004R00

R VERTICAL PULL CARTS 45CM *2 PCS

Code	Stand Size	Panels	Panel Size	Max	Packing	Total
	Cm	Qty	Cm	Kg	Cm	Kg
BX004R00	45	2	45	-	-	-

BX005R00

R VERTICAL PULL CARTS 50CM *2 PCS

Code	Stand Size	Panels	Panel Size	Max	Packing	Total
	Cm	Qty	Cm	Kg	Cm	Kg
BX005R00	50	2	50	-	-	-

BX006R00

R VERTICAL PULL CARTS 60CM *2 PCS

Code	Stand Size	Panels	Panel Size	Max	Packing	Total
	Cm	Qty	Cm	Kg	Cm	Kg
BX006R00	60	2	60	-	-	-

BX007R00

R VERTICAL PULL CARTS 75CM *2 PCS

Code	Stand Size	Panels	Panel Size	Max	Packing	Total
	Cm	Qty	Cm	Kg	Cm	Kg
BX007R00	75	2	75	-	-	-

BX008R00

R VERTICAL PULL CARTS 80CM *2 PCS

Code	Stand Size	Panels	Panel Size	Max	Packing	Total
	Cm	Qty	Cm	Kg	Cm	Kg
BX008R00	80	2	80	-	-	-

BX009R00

R VERTICAL PULL CARTS 90CM *2 PCS

Code	Stand Size	Panels	Panel Size	Max	Packing	Total
	Cm	Qty	Cm	Kg	Cm	Kg
BX009R00	90	2	90	-	-	-

BX010R00

R VERTICAL PULL CARTS 100CM *2 PCS

Code	Stand Size	Panels	Panel Size	Max	Packing	Total
	Cm	Qty	Cm	Kg	Cm	Kg
BX010R00	100	2	100	-	-	-

BX012R00

R VERTICAL PULL CARTS 120CM *2 PCS

Code	Stand Size	Panels	Panel Size	Max	Packing	Total
	Cm	Qty	Cm	Kg	Cm	Kg
BX012R00	120	2	120	-	-	-

BX006R00 60*

R VERTICAL PULL 60CM 5,6,8*2 PCS

Code	Stand Size	Panels	Panel Size	Max	Packing	Total
	Cm	Qty	Cm	Kg	Cm	Kg
BX006R05	54*64*59	5*2	60	-	-	-
BX006R06	64*64*59	6*2	60	-	-	-
BX006R08	84*64*59	8*2	60	-	-	-
BX006R10		10*2	60	-	-	-

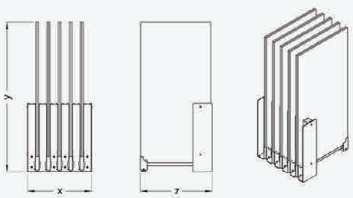

BX007R00 75*

R VERTICAL PULL 75CM 5,6,8*2 PCS

Code	Stand Size	Panels	Panel Size	Max	Packing	Total
	Cm	Qty	Cm	Kg	Cm	Kg
BX007R05	54*78*59	5*2	75	-	-	-
BX007R06	64*78*59	6*2	75	-	-	-
BX007R08	84*78*59	8*2	75	-	-	-
BX007R10		10*2	75	-	-	-

BX008R00 80*

R VERTICAL PULL 80CM 5,6,8 *2 PCS

Code	Stand Size	Panels	Panel Size	Max	Packing	Total
	Cm	Qty	Cm	Kg	Cm	Kg
BX008R05	54*84* 59	5*2	80	-	-	-
BX008R06	64*84* 59	6*2	80	-	-	-
BX008R08	84*84* 59	8*2	80	-	-	-
BX008R10		10*2	80	-	-	-

BX009R00 90*

R VERTICAL PULL 90CM 5,6,8*2 PCS

Code	Stand Size	Panels	Panel Size	Max	Packing	Total
	Cm	Qty	Cm	Kg	Cm	Kg
BX009R05	54*94*59	5*2	90	-	-	-
BX009R06	64*94*59	6*2	90	-	-	-
BX009R08	84*94*59	8*2	90	-	-	-
BX009R10		10*2	90	-	-	-

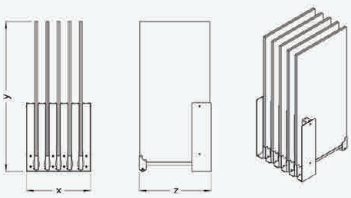

BX010R00 100*

R VERTICAL PULL 100CM 5,6,8*2 PCS

Code	Stand Size	Panels	Panel Size	Max	Packing	Total
	Cm	Qty	Cm	Kg	Cm	Kg
BX010R05	54*104*59	5*2	100	-	-	-
BX010R06	64*104*59	6*2	100	-	-	-
BX010R08	84*104*59	8*2	100	-	-	-
BX009R10		10*2	100	-	-	-

BX012R00 120*

R VERTICAL PULL 120CM 5,6,8 *2 PCS

Code	Stand Size	Panels	Panel Size	Max	Packing	Total
	Cm	Qty	Cm	Kg	Cm	Kg
BX012R05	54*124* 59	5*2	120	-	-	-
BX012R06	64*124* 59	6*2	120	-	-	-
BX012R08	84*124* 59	8*2	120	-	-	-
BX012R10		10*2	120	-	-	-

BX T SERIES

LEFT

T VERTICAL PULL ROTATING OPEN PRF 10*1 PCS

Code	Stand Size	Panels	Panel Size	Max	Packing	Total
	Cm	Qty	Cm	Kg	Cm	Kg
BX098T01	123*106*32	10*1	45*90			
BX098T02	143*136*51	10*1	60*120			
BX098T03	157*96*79	10*1	80*80			
BX098T04	171*106*93	10*1	90*90			

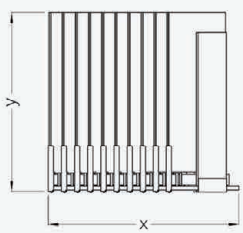

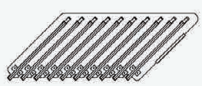

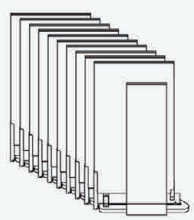

BX T SERIES

RIGHT

T VERTICAL PULL ROTATING OPEN PRF 10*1 PCS

Code	Stand Size	Panels	Panel Size	Max	Packing	Total
	Cm	Qty	Cm	Kg	Cm	Kg
BX097T01	123*106*32	10*1	45*90			
BX097T02	143*136*51	10*1	60*120			
BX097T03	157*96*79	10*1	80*80			
BX097T04	171*106*93	10*1	90*90			

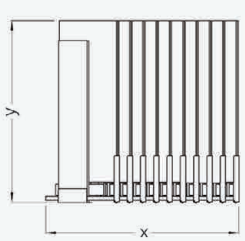

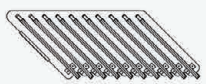

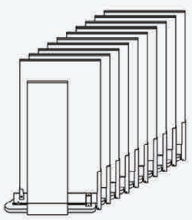

BX X SERIES OPEN METAL BOX

NEW BIG SIZE

BX X SERIES

Code	Stand Size	Panels	Panel Size	Max	Packing	Total
	Cm	Qty	Cm	Kg	Cm	Kg
BX01X05	65*142*282	5*2	120*270			

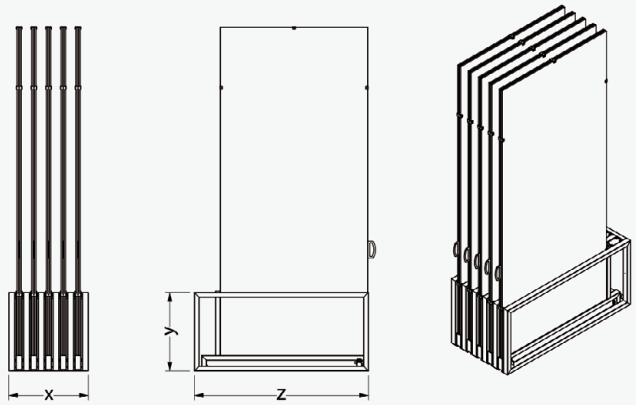

BX000O50

O LOGO PANEL

Code	Stand Size	Panels	Panel Size	Max	Packing	Total
	Cm	Qty	Cm	Kg	Cm	Kg
BX000O50	R	1	12*60	-	-	-
BX000O50	L	1	12*60	-	-	-

BX000O60

O DIGITAL PRINT PANEL

Code	Stand Size	Panels	Panel Size	Max	Packing	Total
	Cm	Qty	Cm	Kg	Cm	Kg
BX000O60	R	1	120*180*2	-	-	-
BX000O61	L	1	120*180*2	-	-	-

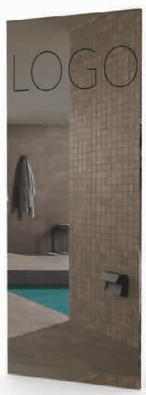

BX000O70

O LOGO PANEL

Code	Stand Size	Panels	Panel Size	Max	Packing	Total
	Cm	Qty	Cm	Kg	Cm	Kg
BX000O70	N-R	1	20*60	-	-	-

BT

TOTEMS

179
195

Fixed Totems
Moving Totems

BT026A

TOTEMS

Code	Stand Size	Panels	Panel Size	Max	Packing	Total
	Cm	Qty	Cm	Kg	Cm	Kg
BT026A01	60*184*78	12	60*60		55*50*200	-
BT026A02	60*144*55	8	30*30			

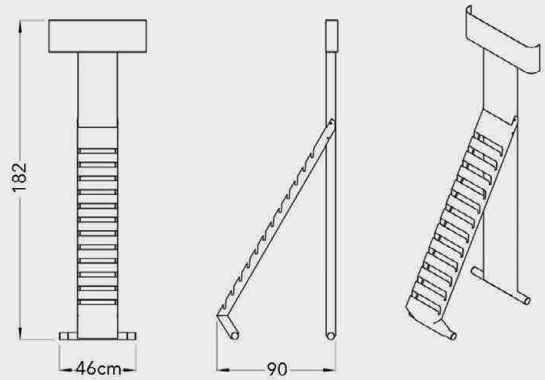

BT026C

TOTEMS

Code	Stand Size	Panels	Panel Size	Max	Packing	Total
	Cm	Qty	Cm	Kg	Cm	Kg
BT026C01	41*173*55	15	60*60	-	-	-

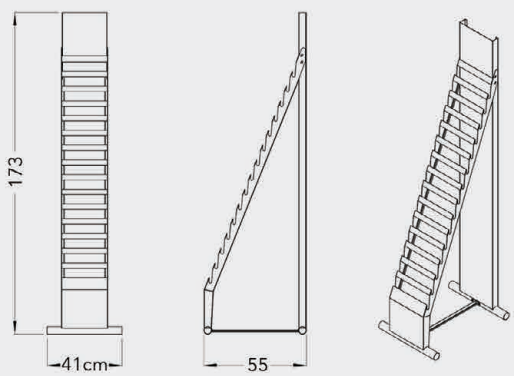

BT027E

TOTEMS

Code	Stand Size	Panels	Panel Size	Max	Packing	Total
	Cm	Qty	Cm	Kg	Cm	Kg
BT027E01	90*175*90	64	36*36	-	-	-

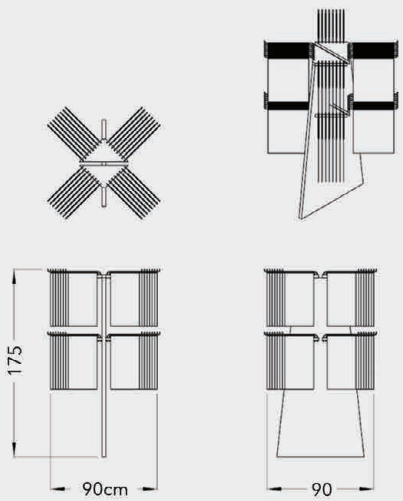

BT027K

TOTEMS

Code	Stand Size	Panels	Panel Size	Max	Packing	Total
	Cm	Qty	Cm	Kg	Cm	Kg
BT027K01	72*200*83	36	35*35	-	64*101*254	-

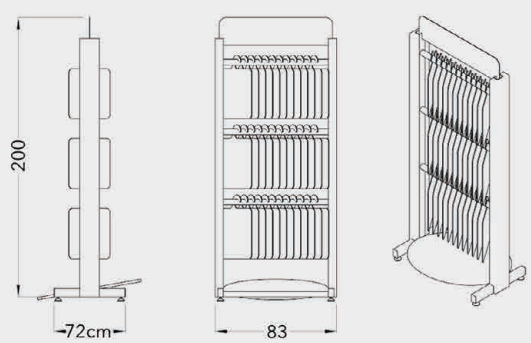

BT026L

TOTEMS

Code	Stand Size	Panels	Panel Size	Max	Packing	Total
	Cm	Qty	Cm	Kg	Cm	Kg
BT026L01	90*200*64	120	37.5*20.5 85*20.5	-	-	-

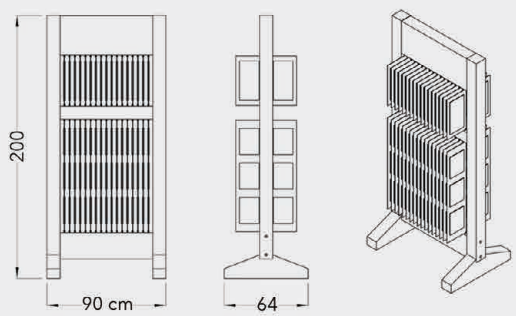

BT026N

TOTEMS

Code	Stand Size	Panels	Panel Size	Max	Packing	Total
	Cm	Qty	Cm	Kg	Cm	Kg
BT026N01	67*225*68	100	16.5*33	-	-	-

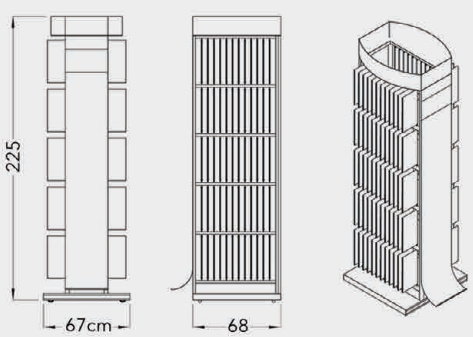

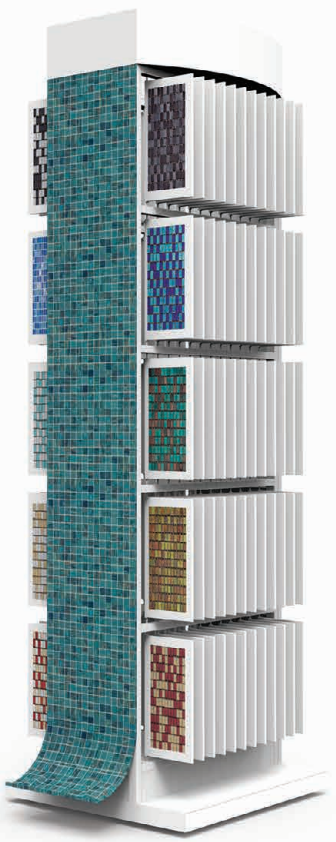

BT027S

TOTEMS

Code	Stand Size	Panels	Panel Size	Max	Packing	Total
	Cm	Qty	Cm	Kg	Cm	Kg
BT027S01	100*218*102	144	-	-	126*80*135	-

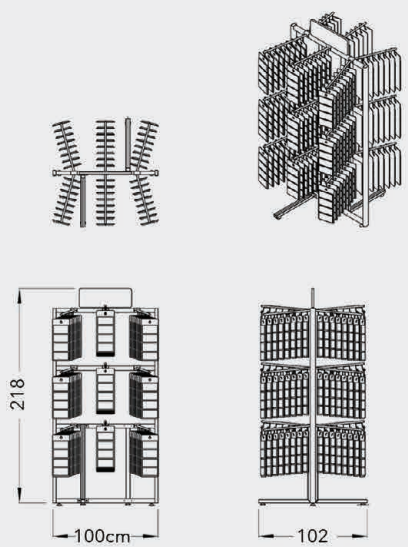

BT027T

TOTEMS

Code	Stand Size	Panels	Panel Size	Max	Packing	Total
	Cm	Qty	Cm	Kg	Cm	Kg
BT027T01	90*187*60	54	33*33	-	66*202*66	-

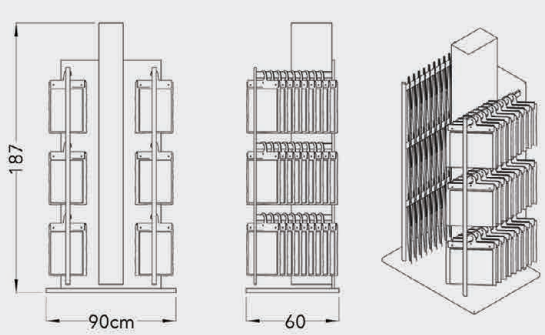

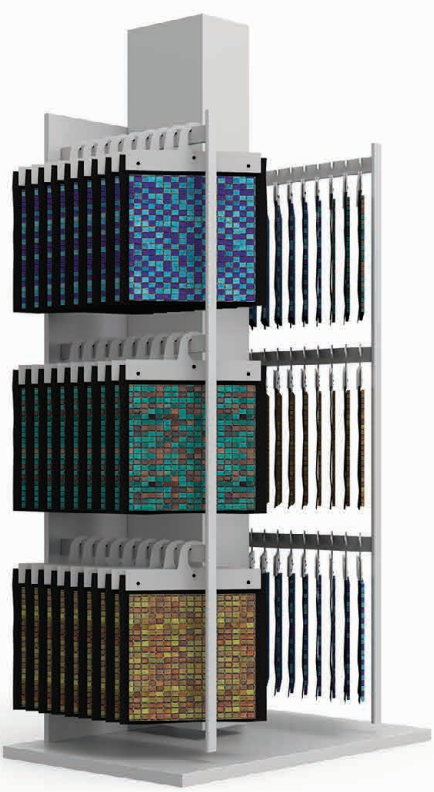

BT028A

TOTEMS

Code	Stand Size	Panels	Panel Size	Max	Packing	Total
	Cm	Qty	Cm	Kg	Cm	Kg
BT028A01	60*160*75	14	60*60	-	-	-

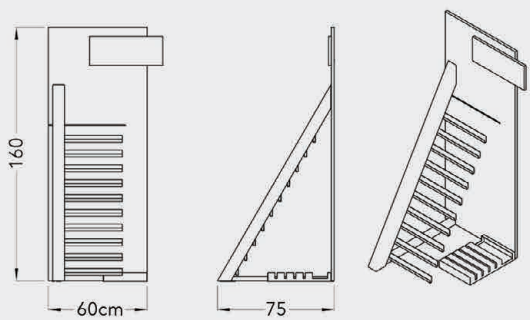

BT028B

TOTEMS

Code	Stand Size	Panels	Panel Size	Max	Packing	Total
	Cm	Qty	Cm	Kg	Cm	Kg
BT028B01	60*160*75	14	60*60	-	82*95*198	-

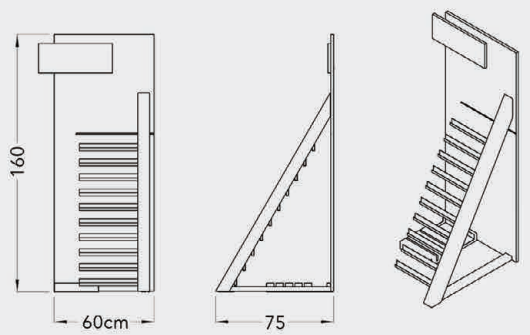

BT028C

TOTEMS

Code	Stand Size	Panels	Panel Size	Max	Packing	Total
	Cm	Qty	Cm	Kg	Cm	Kg
BT028C01	120*160*75	28	60*60	-	155*75*195	-

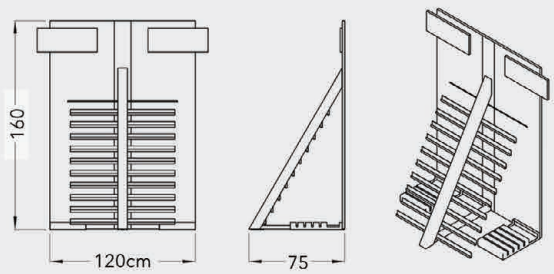

BT030A

TOTEMS

Code	Stand Size	Panels	Panel Size	Max	Packing	Total
	Cm	Qty	Cm	Kg	Cm	Kg
BT030A01	50*160*120	30	33*33	-	-	-

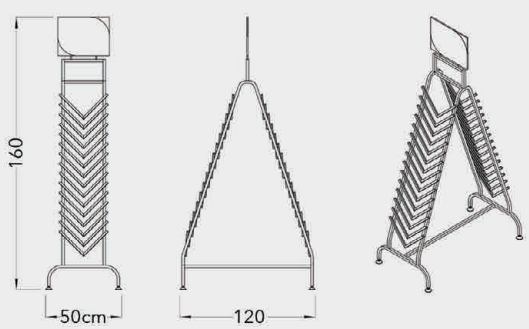

BT030B

TOTEMS

Code	Stand Size	Panels	Panel Size	Max	Packing	Total
	Cm	Qty	Cm	Kg	Cm	Kg
BT030B01	95*205*60	24	33*33	-	104*85*230	-

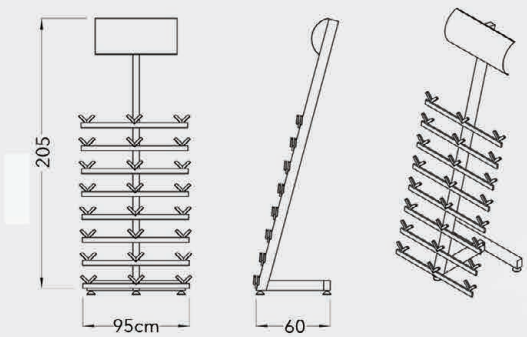

BT030G

TOTEMS

Code	Stand Size	Panels	Panel Size	Max	Packing	Total
	Cm	Qty	Cm	Kg	Cm	Kg
BT030G01	52*134*52	10	33*33	-	-	-

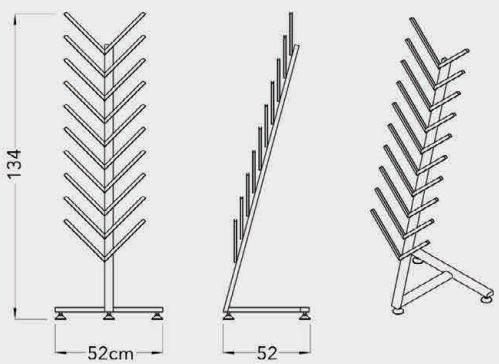

BT030H

TOTEMS

Code	Stand Size	Panels	Panel Size	Max	Packing	Total
	Cm	Qty	Cm	Kg	Cm	Kg
BT030H01	52*142*52	15	33*33	-	132*60*179	-

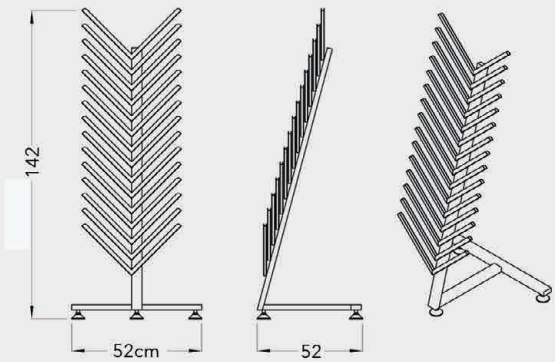

BT030I

TOTEMS

Code	Stand Size	Panels	Panel Size	Max	Packing	Total
	Cm	Qty	Cm	Kg	Cm	Kg
BT030I01	137*100*40	18	33*33	-	-	-

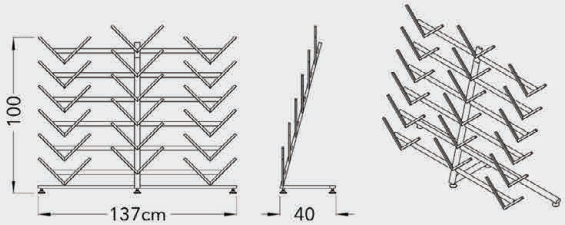

BT030J

TOTEMS

Code	Stand Size	Panels	Panel Size	Max	Packing	Total
	Cm	Qty	Cm	Kg	Cm	Kg
BT030J01	143*158*64	45	33*33	-	154*75*214	-

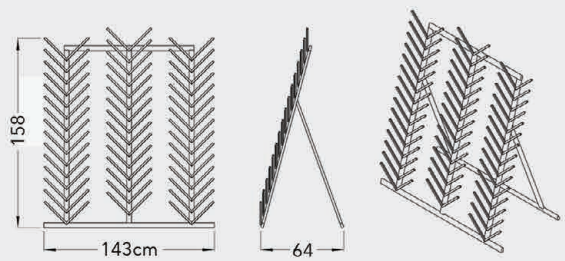

BT050A

TOTEMS

Code	Stand Size	Panels	Panel Size	Max	Packing	Total
	Cm	Qty	Cm	Kg	Cm	Kg
BT050A01	55*104*55	24	-	-	90*220*70	-

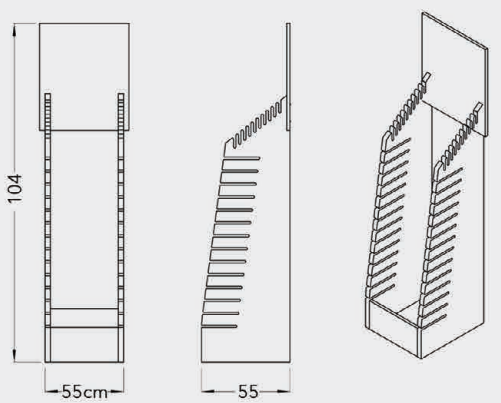

BT053A

TOTEMS

Code	Stand Size	Panels	Panel Size	Max	Packing	Total
	Cm	Qty	Cm	Kg	Cm	Kg
BT053A01	60*218*60	84	-	-	135*77*244	-

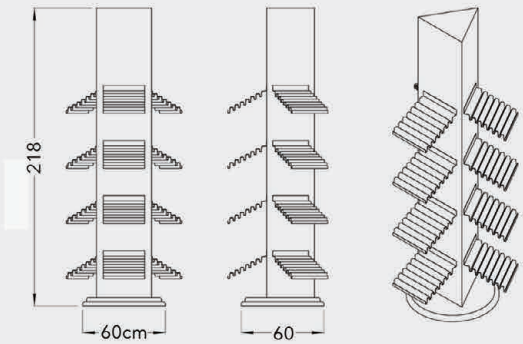

BT054A

TOTEMS

Code	Stand Size	Panels	Panel Size	Max	Packing	Total
	Cm	Qty	Cm	Kg	Cm	Kg
BT054A01	60*220*60	84	-	-	-	-

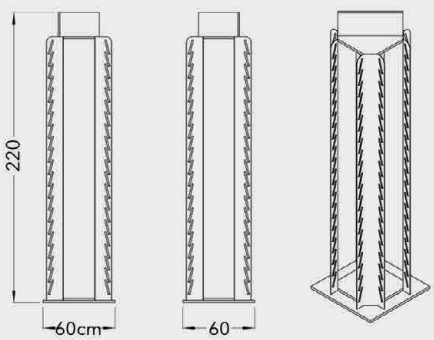

BT060A 20 mm CERAMIC,GALVANISE

TOTEMS

Code	Stand Size	Panels	Panel Size	Max	Packing	Total
	Cm	Qty	Cm	Kg	Cm	Kg
BT060A01	50*110*77.5	6	60*60	-	-	-

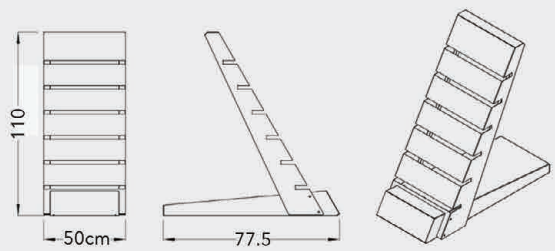

BT060B 20/30 mm CERAMIC

TOTEMS

Code	Stand Size	Panels	Panel Size	Max	Packing	Total
	Cm	Qty	Cm	Kg	Cm	Kg
BT060B01	50*110*92	6	60*60*2	-	86*66*143	-
BT060B01	50*110*92	6	60*60*3	-	86*66*143	-

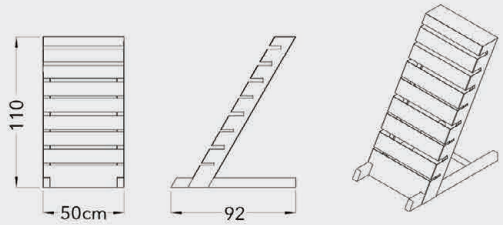

BT061C 20 mm CERAMIC

TOTEMS

Code	Stand Size	Panels	Panel Size	Max	Packing	Total
	Cm	Qty	Cm	Kg	Cm	Kg
BT061C01	170*178*78	21	60*60 60*120	-	-	-

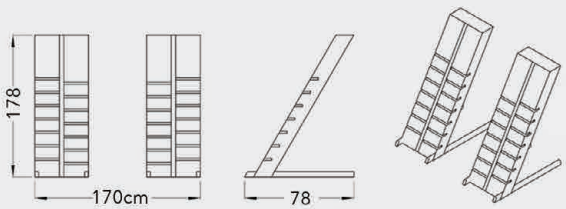

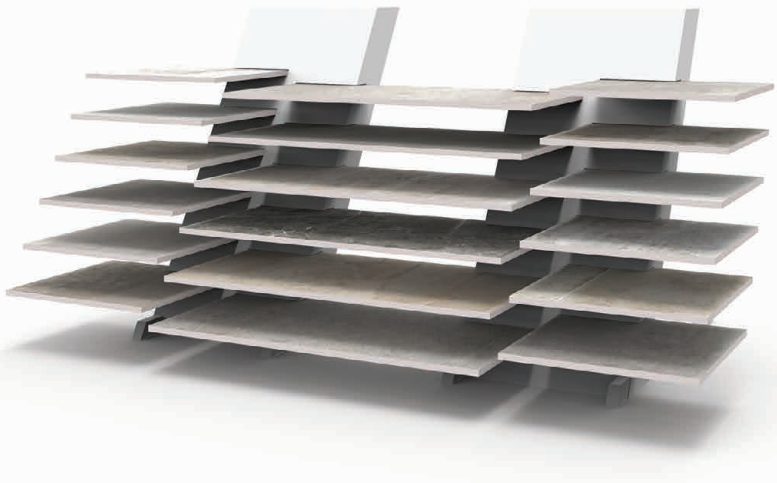

BT062A 20 mm CERAMIC

TOTEMS

Code	Stand Size	Panels	Panel Size	Max	Packing	Total
	Cm	Qty	Cm	Kg	Cm	Kg
BT062A01	50*94*50	12	60*60	-	-	-

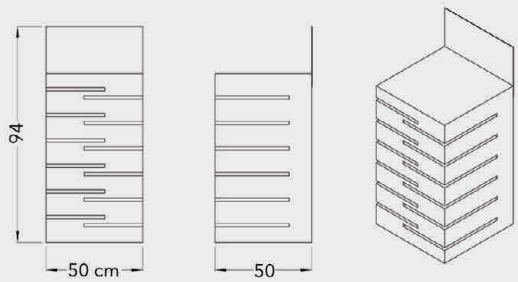

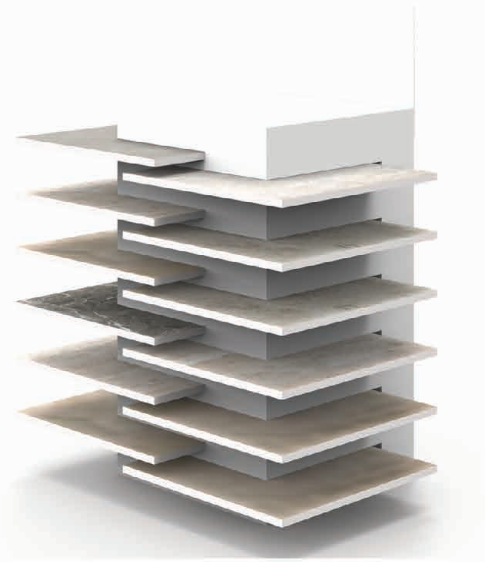

BT063A

TOTEMS

Code	Stand Size	Panels	Panel Size	Max	Packing	Total
	Cm	Qty	Cm	Kg	Cm	Kg
BT063A01	89*200*40	10	56*80	-	-	-

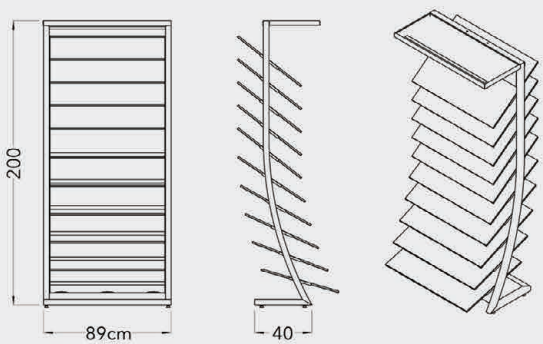

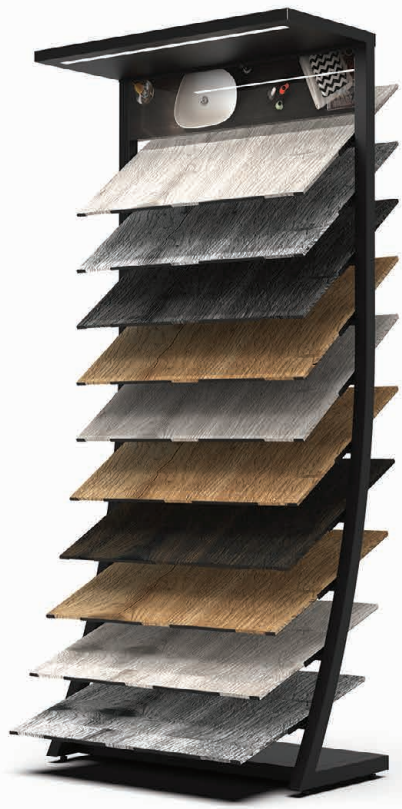

BT064A

TOTEMS

Code	Stand Size	Panels	Panel Size	Max	Packing	Total
	Cm	Qty	Cm	Kg	Cm	Kg
BT064A01	56*180*40	36	15*15	-	-	-

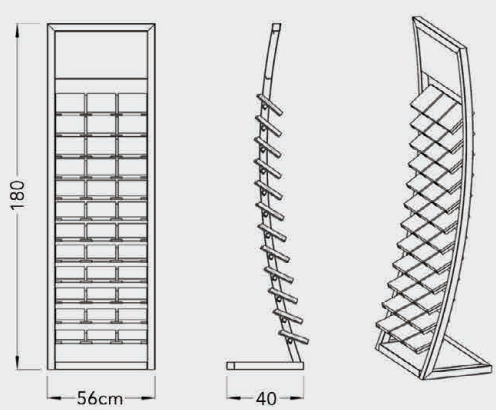

BT066A

TOTEMS

Code	Stand Size	Panels	Panel Size	Max	Packing	Total
	Cm	Qty	Cm	Kg	Cm	Kg
BT066A01	40*175*35	25	25*25	-	-	-

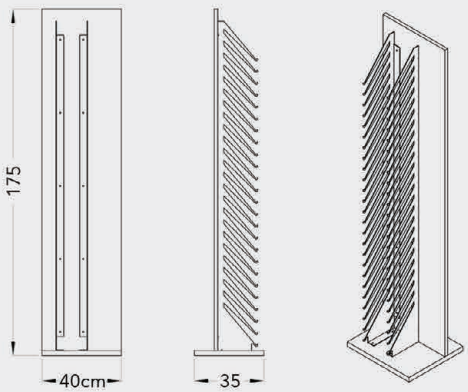

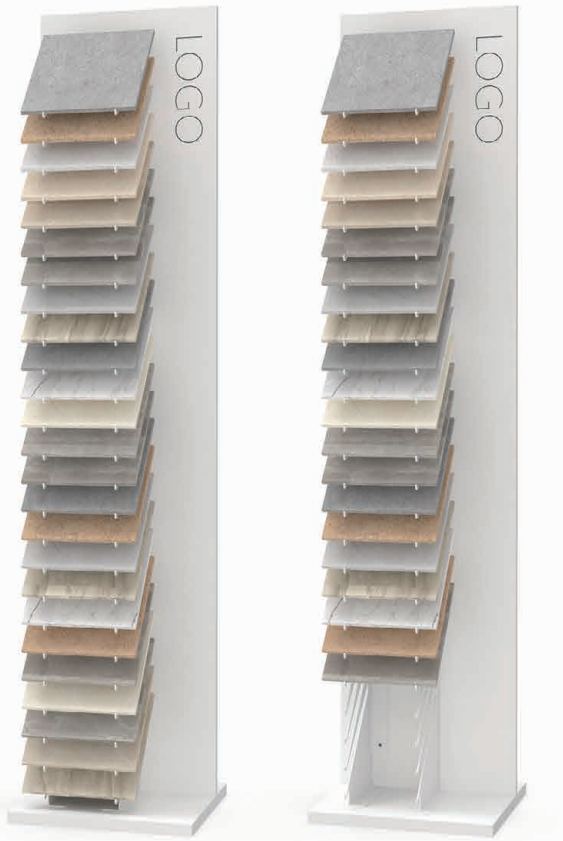

BT068A

TOTEMS

Code	Stand Size	Panels	Panel Size	Max	Packing	Total
	Cm	Qty	Cm	Kg	Cm	Kg
BT068A01	80*174*61	16	22.5*129.5	-	-	-

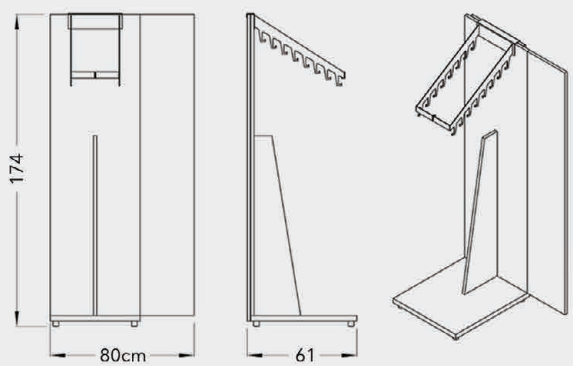

BT070A

TOTEMS

Code	Stand Size	Panels	Panel Size	Max	Packing	Total
	Cm	Qty	Cm	Kg	Cm	Kg
BT070A01	45*185*73	40	30*60	-	-	-

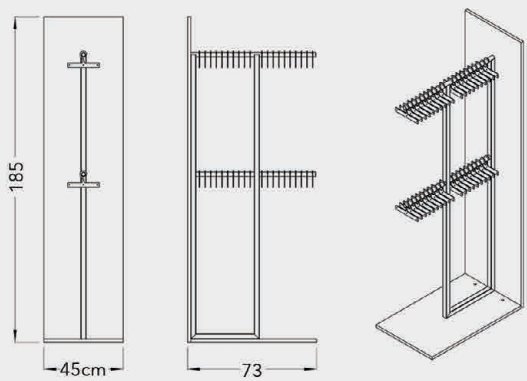

BT072A

20 mm CERAMIC

TOTEMS

Code	Stand Size	Panels	Panel Size	Max	Packing	Total
	Cm	Qty	Cm	Kg	Cm	Kg
BT072A01	50*138*60	8	60*60*2	-	-	-

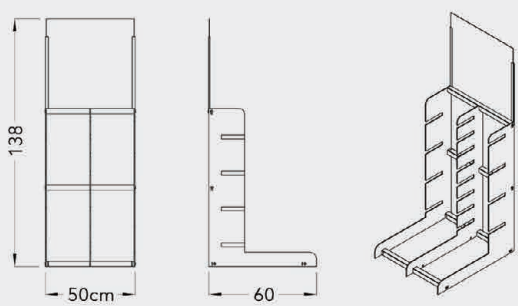

BT074A

TOTEMS

Code	Stand Size	Panels	Panel Size	Max	Packing	Total
	Cm	Qty	Cm	Kg	Cm	Kg
BT074A01	120*156*120	12	80*80	-	-	-

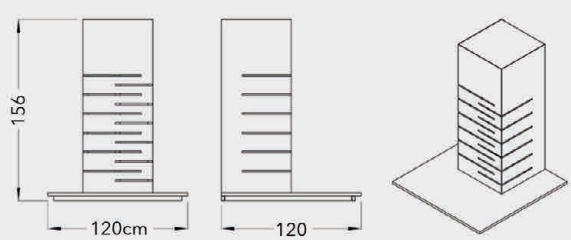

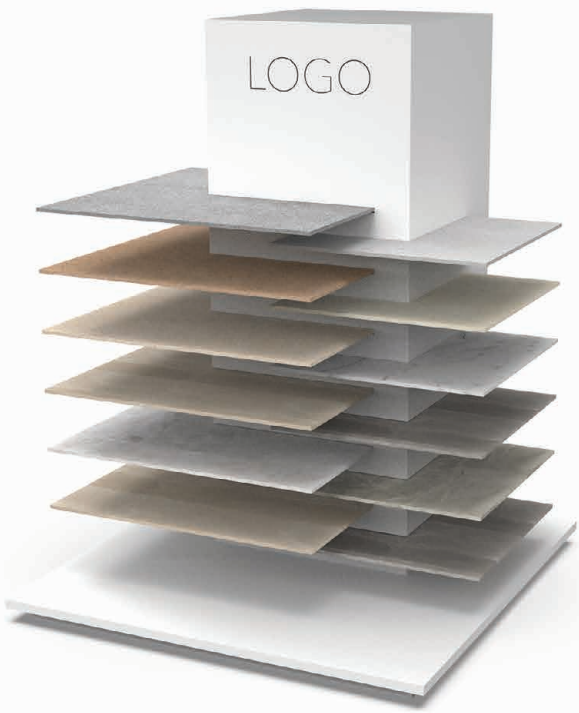

BT068B

TOTEMS

Code	Stand Size	Panels	Panel Size	Max	Packing	Total
	Cm	Qty	Cm	Kg	Cm	Kg
BT068B01	52*200*70	16	-		- -	

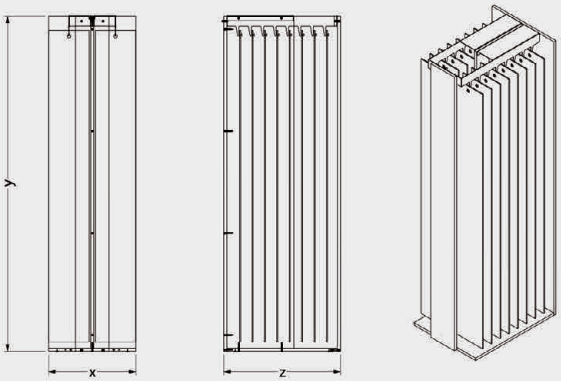

NEW

NEW

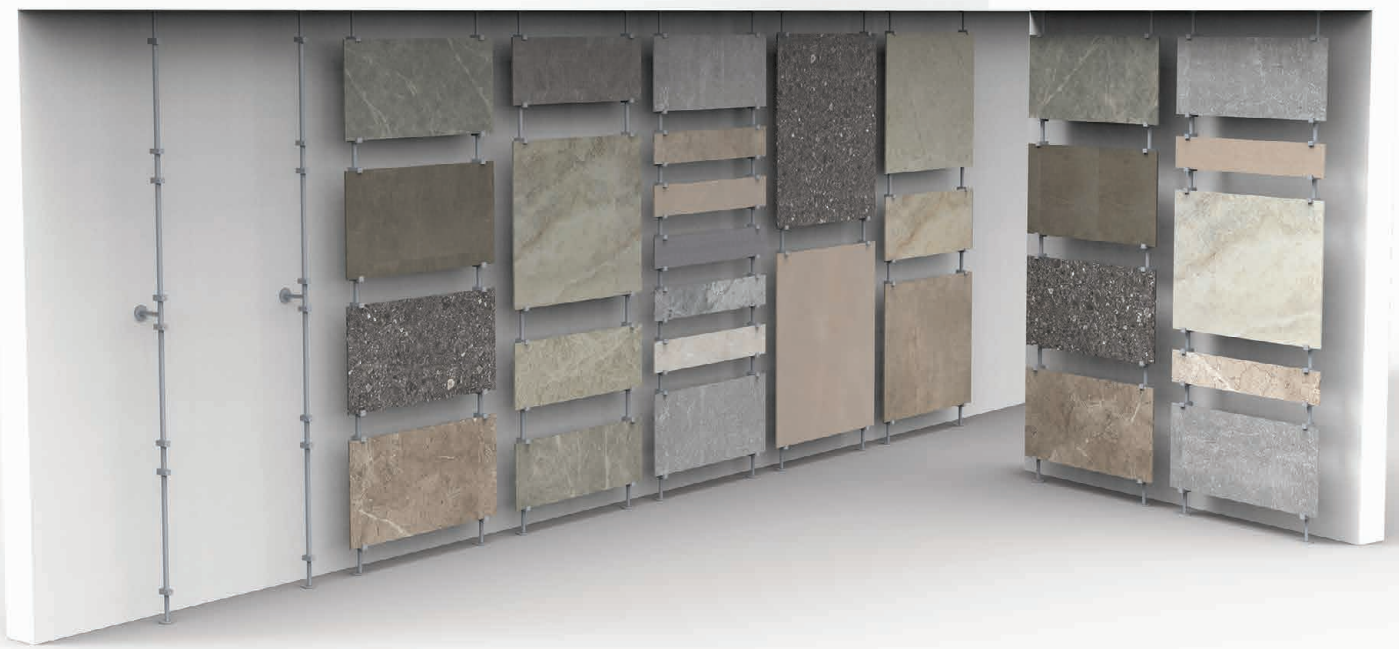

BW067M

STANDS

Code	Stand Size	Panels	Panel Size	Max	Packing	Total
	Cm	Qty	Cm	Kg	Cm	Kg
BW067M01						

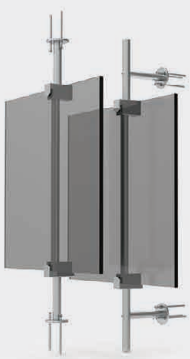

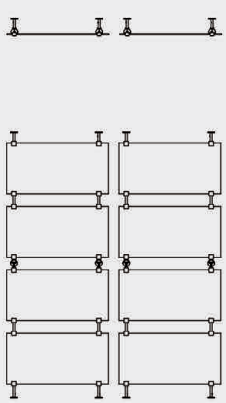

DISPLAYS

BS DISPLAYS

DISPLAYS & SHOWROOMS

205
212

Armature, Sanitary Stands
Shower Plate Stands
Doors Stands
Carpet Stands

DISPLAYS

BS031A

ARMATURE DISPLAYS

Code	Stand Size	Panels	Panel Size	Max	Packing	Total
	Cm	Qty	Cm	Kg	Cm	Kg
BS031A01	90*190*45	-	-	-	99*67*199	-

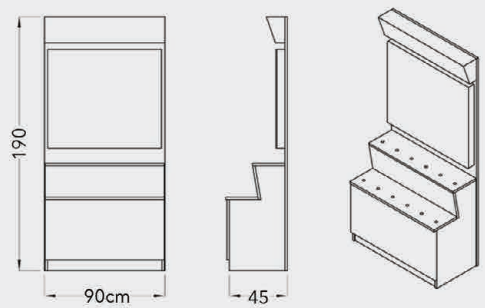

BS032A

ARMATURE DISPLAYS

Code	Stand Size	Panels	Panel Size	Max	Packing	Total
	Cm	Qty	Cm	Kg	Cm	Kg
BS032A01	97*145*85	-	-	-	-	-

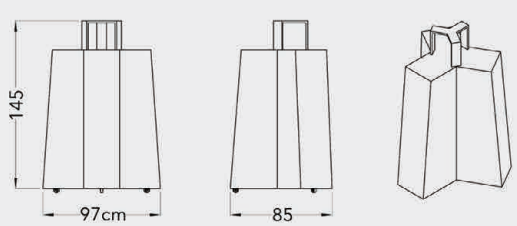

BS033A

ARMATURE DISPLAYS

Code	Stand Size	Panels	Panel Size	Max	Packing	Total
	Cm	Qty	Cm	Kg	Cm	Kg
BS033A01	55*60*30	-	-	-	-	-

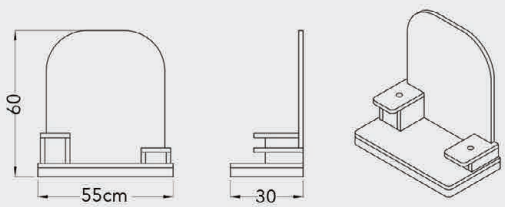

BS034A

ARMATURE DISPLAYS

Code	Stand Size	Panels	Panel Size	Max	Packing	Total
	Cm	Qty	Cm	Kg	Cm	Kg
BS034A01	90*190*90	-	-	-	99*211*99	-

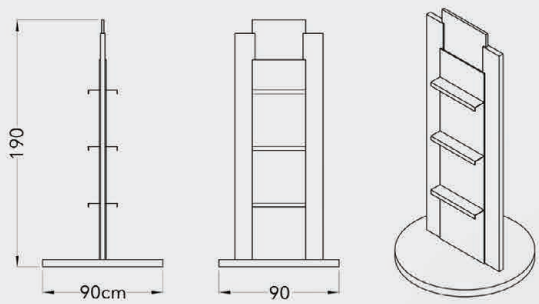

BS035A

ARMATURE DISPLAYS

Code	Stand Size	Panels	Panel Size	Max	Packing	Total
	Cm	Qty	Cm	Kg	Cm	Kg
BS035A01	90*190*90	4	50*182	-	99*213*99	-

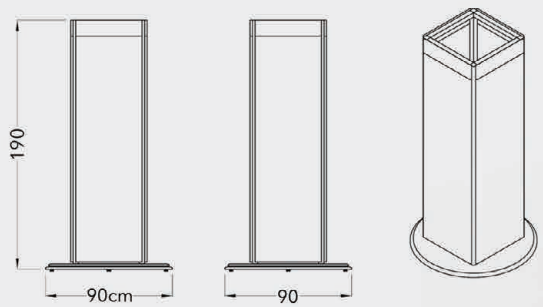

BS036A

ARMATURE DISPLAYS

Code	Stand Size	Panels	Panel Size	Max	Packing	Total
	Cm	Qty	Cm	Kg	Cm	Kg
BS036A01	100*192*100	2	90*192	-	110*85*214	-

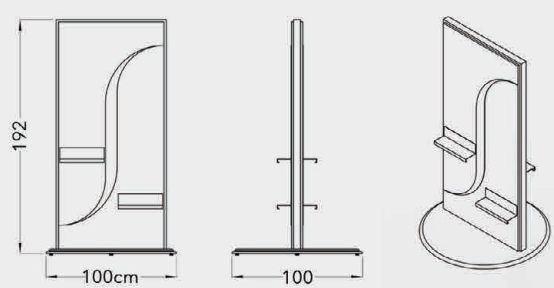

BS038A

ARMATURE DISPLAYS

Code	Stand Size	Panels	Panel Size	Max	Packing	Total
	Cm	Qty	Cm	Kg	Cm	Kg
BS038A01	250*240*122	3	120*209	-	134*107*251	-

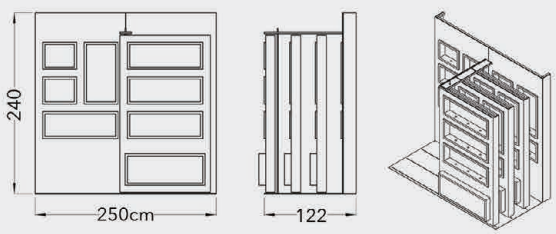

BS039A

ARMATURE DISPLAYS

Code	Stand Size	Panels	Panel Size	Max	Packing	Total
	Cm	Qty	Cm	Kg	Cm	Kg
BS039A01	250*90*43	-	-	-	54*113*260	-

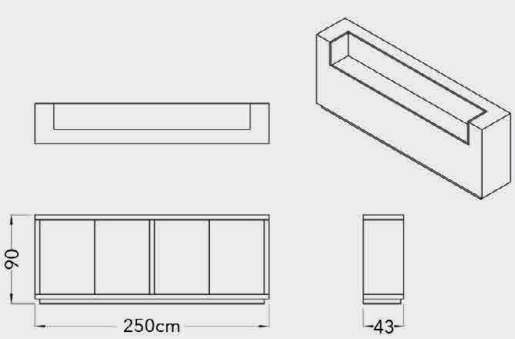

BR701A

STAND DOOR SERIES

Code	Stand Size	Panels	Panel Size	Max	Packing	Total
	Cm	Qty	Cm	Kg	Cm	Kg
BR701A01	190*215*92	10	91*201	0	115*120*210	0

BR702A

STAND DOOR SERIES

Code	Stand Size	Panels	Panel Size	Max	Packing	Total
	Cm	Qty	Cm	Kg	Cm	Kg
BR702A01	185*248*162	6	90*205	0	115*110*230	0

BR703A

STAND DOOR SERIES

Code	Stand Size	Panels	Panel Size	Max	Packing	Total
	Cm	Qty	Cm	Kg	Cm	Kg
BR703A01	104*193*107	6	82*200	0	115*120*210	0

BR704A

STAND DOOR SERIES

Code	Stand Size	Panels	Panel Size	Max	Packing	Total
	Cm	Qty	Cm	Kg	Cm	Kg
BR704A01	459*232*117	8	90*205	0	115*110*210	0

BR705A

STAND DOOR SERIES

Code	Stand Size	Panels	Panel Size	Max	Packing	Total
	Cm	Qty	Cm	Kg	Cm	Kg
BR705A01	263*232*263	4	90*205	0	100*210*80	0

BR706A

STAND DOOR SERIES

Code	Stand Size	Panels	Panel Size	Max	Packing	Total
	Cm	Qty	Cm	Kg	Cm	Kg
BR706A01	238*257*167	10	110*210	0	100*121*80	0

COMPONENTS

BU001K

HANDLES BOR

Code	Stand Size	Panels	Size (x*x1)	Max	Packing	Total
	Cm	Qty	mm	Kg	Cm	Kg
BU001K01			346*256			
BU001K02			536*256			
BU001K03			792*512			
BU001K04			1048*768			

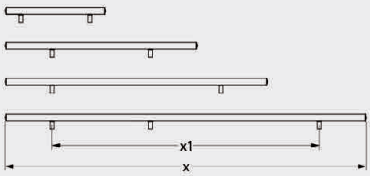

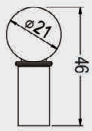

BU002K

HANDLES ZET

Code	Stand Size	Panels	Size (x*x1)	Max	Packing	Total
	Cm	Qty	mm	Kg	Cm	Kg
BU002K01			346*256			
BU002K02			536*256			
BU002K03			792*512			
BU002K04			1048*768			

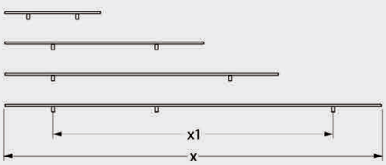

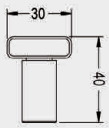

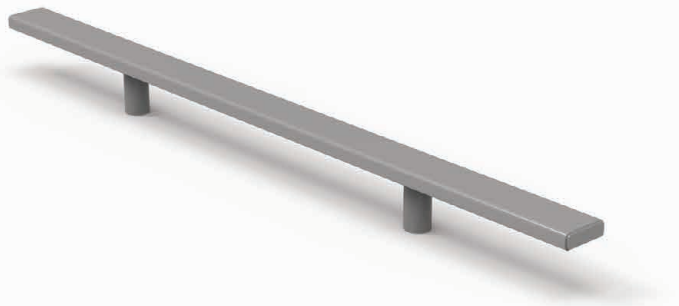

BU003K

HANDLES TAR

Code	Stand Size	Panels	Size (x*x1)	Max	Packing	Total
	Cm	Qty	mm	Kg	Cm	Kg
BU003K00						

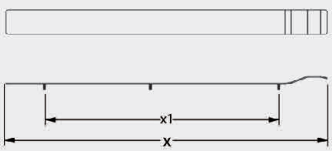

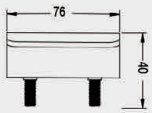

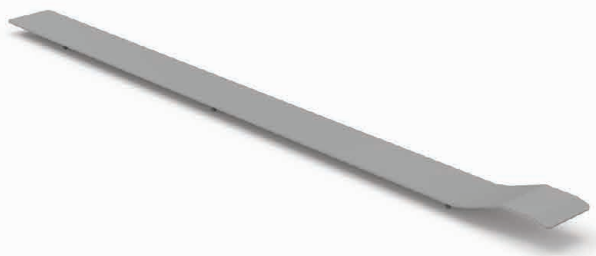

BU004K

HANDLES ARA

Code	Stand Size	Panels	Size	Max	Packing	Total
	Cm	Qty	mm	Kg	Cm	Kg
BU004K01			397*20*40			
BU004K02			497*20*40			
BU004K03			597*20*40			
BU004K04			797*20*40			
BU004K05			997*20*40			

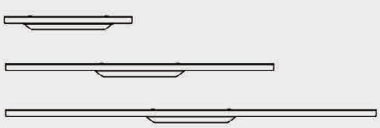

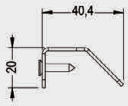

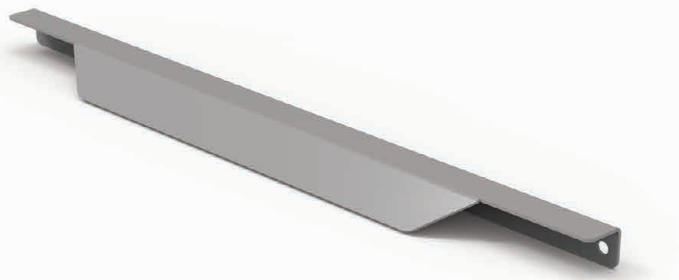

BU005K

HANDLES EVO

Code	Stand Size	Panels	Size (x*x1)	Max	Packing	Total
	Cm	Qty	mm	Kg	Cm	Kg
BU005K01			256*240			
BU005K02			512*494			
BU005K03			768*752			

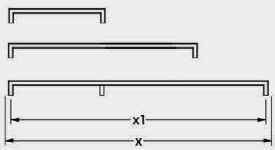

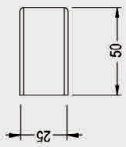

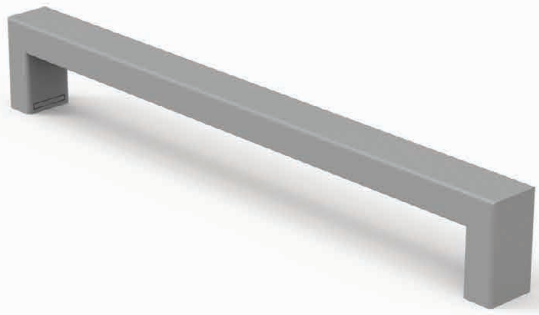

BU006K

HANDLES TOR

Code	Stand Size	Panels	Size (x*x1)	Max	Packing	Total
	Cm	Qty	mm	Kg	Cm	Kg
BU006K00						

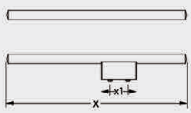

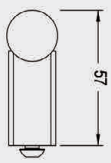

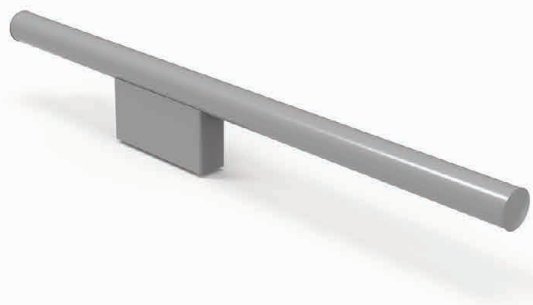

BU007K

TİLE HOLDER ZEN

Code	Stand Size	Panels	Size (x*x1)	Max	Packing	Total
	Cm	Qty	mm	Kg	Cm	Kg
BU007K01			256*240			
BU007K02			512*494			
BU007K03			768*752			

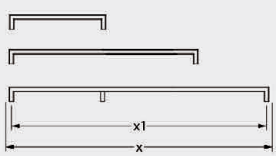

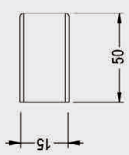

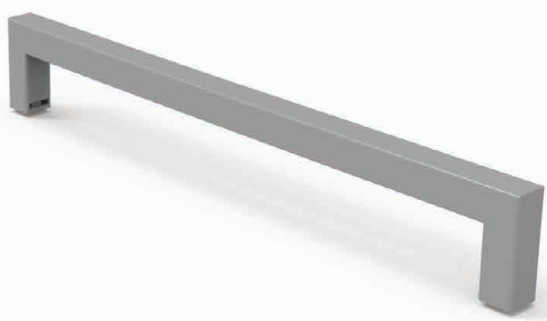

COLOURS

COLOURS

COLOURS

Laquer Colours
Accessory Colours
Metal Colours
Laminated Colours

COLOURS

COLOUR CHART

LACQUER MDF COLOUR

L 9016 M
BrLac White Matt

L 9016 G
BrLac White Glossy

L 9005 M
BrLac Black Matt

L 9005 G
BrLac Black Glossy

L 9001 M
BrLac Beige Matt

LACQUER MDF COLOUR

L 9618 M
BrLac Bronze Matt

L 9006 M
BrLac Grey Matt

L 9006 G
BrLac Grey Glossy

L 7043 M
BrLac Ash Grey Matt

L 3434 M
BrLac Antracite Matt

LACQUER MDF COLOUR

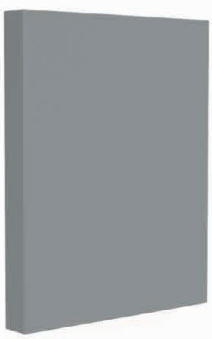

L 9007 M
BrLac Dark Grey Matt

L 4848 S
BrLac Antracite Sym

ACCESSORY ALU, PLSTC, GLASS COLOUR

A 9016 M
Br White Matt

A 9005 M
Br Black Matt

A 9006 M
Br Grey Matt

A 0801 G
Br Naturel Glass

A 0802 G
Br Satine Glass

COLOUR CHART

METAL COLOUR

M 9016 M
Br White Matt RAL

M 9016 G
Br White Glossy RAL

M 9016 T
Br White Texture RAL

M 9016 O
Br White Org. Texture RAL

M 9001 M
Br Beige Matt RAL

METAL COLOUR

M 9005 M
Br Black Matt RAL

M 9005 G
Br Black Glossy RAL

M 9005 T
Br Black Texture RAL

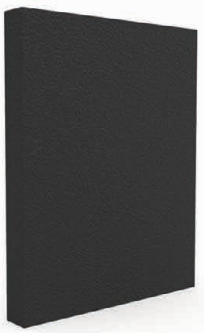

M 9005 O
Br Black Org. Texture RAL

M 9618
Br Bronze Matt

METAL COLOUR

M 9006 M
Br Grey Matt RAL

M 9006 G
Br Grey Glossy RAL

M 9006 T
Br Grey Texture RAL

M 9006 H
Br Grey H Glossy RAL

METAL COLOUR

M 7043 M
Br Ash Grey Matt

M 3434 M
Br Antracite Matt

M 4848 S
Br Antracite Sym Texture

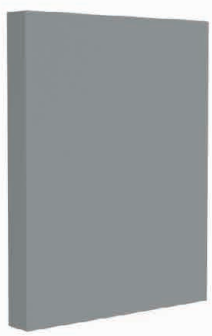

M 9007 M
Br Dark Grey Matt RAL

LAMINATED MDF, CHIPBOARD COLOUR

W 9016 M
BrLam White Matt

W 9016 G
BrLam White Semi Matt

W 9005 M
BrLam Black Matt

W 9005 G
BrLam Black Semi Matt

W 9001 M
BrLam Beige Matt

LAMINATED MDF, CHIPBOARD COLOUR

W 9007 M
BrLam Dark Grey Matt

W 9006 M
BrLam Grey Matt

W 3434 M
BrLam Antracite Matt

W 7043 M
BrLam Ash Grey Matt

LIGHT COLOUR

A 0950 G
Br Day Light 6500K

A 0951 G
Br Bright Light 4100K

A 0952 G
Br Warm Light 3000K

To All Our Valued Person's ! , Abdil Yurdaer, Ahmet Aktaş, Ahmet Alabuçak, Ahmet Çolak, Ahmet Mert, Ahmet Osmalı, Ahmet Tiryaki,Altan Tezcan, Andrea Corradi, Aynur Özdalgın,AslıhanErdem,Ayşe Elma, Ayşe Yılmaz, Ayten Çavuşoğlu, Berke Zor, Bora Mehmet Osmalı, Burak Şenyüzlü, Buse Özyılmaz, Büşra Arı, Büşra Kara, Can Kaynakcı, Cemal Altıntaş, Cuma Arslan Deniz Kırmaz, Derviş Karpuz, Döndü Kesgin, Emine Güven, Emine Satıcı, Emre Sağlam, Eray Aykuş , Erhan Uludirik, Erkan Yıldırım, Ersin Kerekli, Esra Yolaçan, Esra Telken, Erdal Erdoğmuş, Fahri Şen, Ferhat Taktaklar, Feridun Karataş, Ferit Kaya, Fevzi Çam, Firdas Rustam, Francisco De Pablo, Funda Topçu, Gamze Angün. Gamze Osmalı, Gonca Osmalı Dabanlı, Gökhan Sertyalçın, Gözde Işın, Gülfer Bilir, Güllü Özkara, Gürkan Çakır, Habibe Gürdoğan, Halil Karayılan, Halit Can, Hilal Şimşek , Hüseyin Emek, Hüseyin Kara, İbrahim Emeklice, İlhan Sürü,Ilhan Uraybaş, İsmail Ağdeviren, İsmail Çepni, İsmail Yıldız,Jose Barrachina, Kemal Coşkun, Kübra Biçerer, Leyla Akif, Leyla Akif, Liudmila Ghilas, M.Ali Çayır, Maria Vilar Sanz, Mehmet Akyıldız, Mehmet Güneş, Mehmet Oduncuoğlu, Mehmet Tozo Gülen, Melike Bağlan, Melike Koçay, Mert Sarıçam, Mesut Şahin, Metin Adaşoğlu, Mevlüt Özden, Muhammed Karaca, Murat Ayva, Murat Durmaz, Murat Şenkal, Mustafa Bozok, Mustafa Ceyhan, Mustafa Koltuk, Necati Sağay, Nurettin Yıldız, Osman Erdoğdu, Osman Güler, Osman Osmanov Öner Çamoğlu, Özge Özdemir, Özlem Yoldaş Nakışçı, Pelin Cemek, Ramazan Ekşioğlu, Ramazan Dönmez, Rafet Doruk, Ruhi Soyal, Samet Sezer, Selma Koltuk, Serdar Özkan, Serhat Tuğlacıoğlu, Serpil Güleken, Sait Bikbay, Seyfullah Maden, Seyit Ahmet Türker, Serkan Ekici, Sezai Suluyer, Sezgin Suluyer, Sibel Güvenç, Sonay Özdemir, Songül Koyuncuoğlu, Şükrü Can Mutlu, Şükrü Demir, Tayfun Şahin, Tayfun Mert Osmalı, Teslime Karayılan, Tuba Çeliktepe, Tuğba Çakmak, Turgut Keser, Tümay Tümgan, Uğur Acaban, Uğur Çelikbudak, Vedat Doğruparmak, Yalçın Koçak, Yaşar Coşkun, Yaşar Işıkcı, Yeşim Türeyen, Yılmaz Deniz, Yücel Kızılçay, Yücel Korkmaz, Zenel Abidin Solak Thanks!..

Factory
Bora Çelik
Eşya, ve Mob. İnş. Mlz. San. Tic. Ltd. Şti.
Organize Sanayi Bölgesi 21.Cadde
No.41 Pk.26250
Eskişehir / Türkiye
t + 90 222 236 19 40
f + 90 222 236 19 41
info@boracelik.com.tr

Turkey Showroom
Bora Çelik
Yavuz Selim Cd. Bozoklu İş Hanı 1No.23
A-1 Asmakat Ataşehir
İstanbul / Türkiye
t + 90 216 470 40 26
showroom@boracelik.com.tr

Spain Showroom
Bora Celik S.L.U
Avda Mediterraneo 120, nave
3, km 5,5 12200 Onda(Castellon)
Spain
t + 34 697 600 643
milaghilas@boracelik.es

Italy Showroom
Bora Celik Italy SRL
Via del Crociale
30,10042 Fiorano Modenese (MO)
Italy
t + 390536920519
acorradi@boracelik.it

www.boracelik.com.tr
/boracelikdisplays
/boracelikdisplays

NOTES

NOTES

NOTES

boracelik

ESKİŞEHİR TURKEY
İSTANBUL TURKEY
CASTELLON SPAIN
SASSUOLO ITALY

BRONZE 2141 CATALOG

317020001